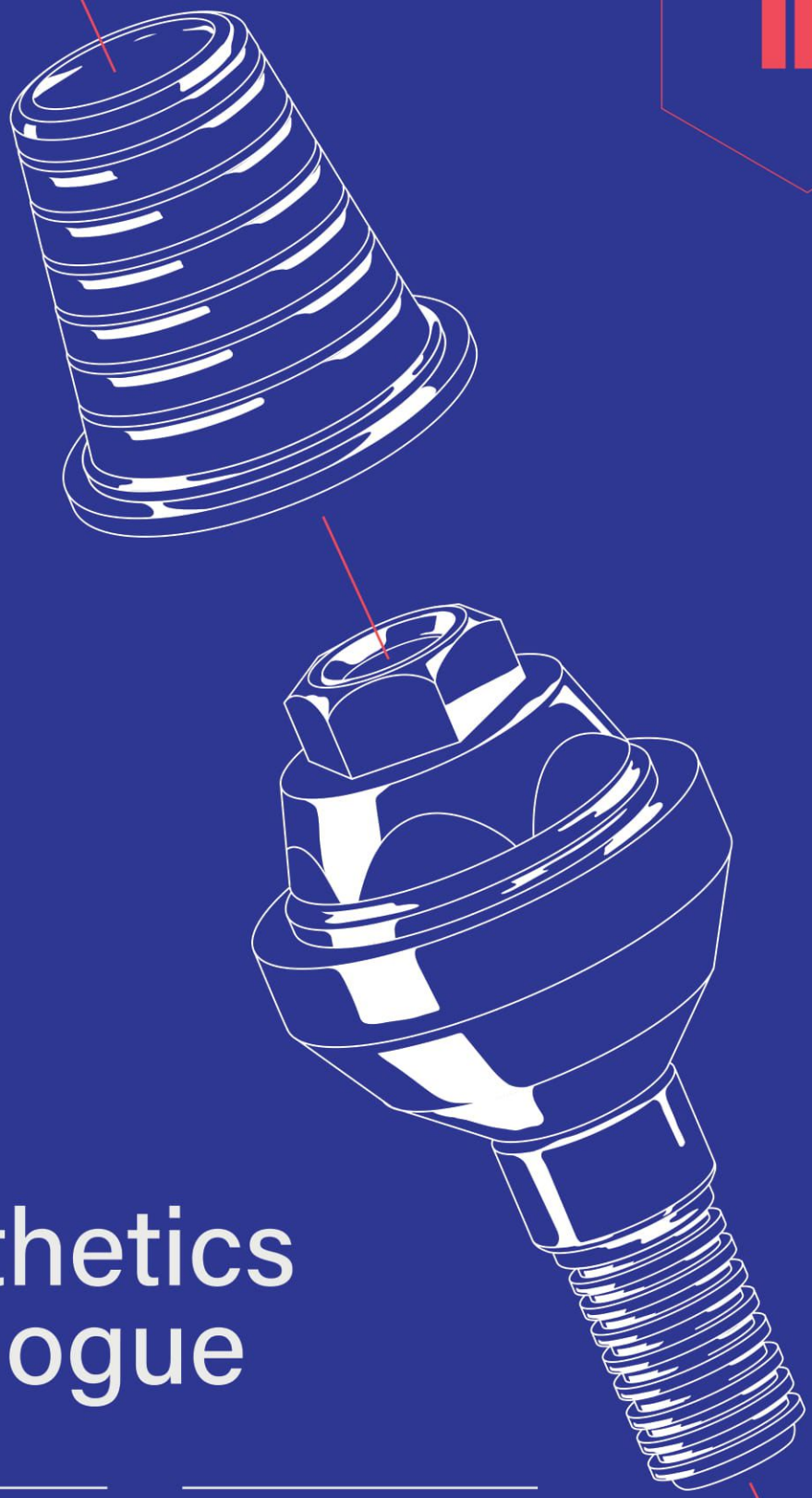

Prosthetics Catalogue

2020-2021

Let's make implant works

novamind®

Our products have not only been established as quality prosthetic solutions, but have also been recognized as the latest innovative developments in the field of implantology.

Novamind has become within the last decade synonymous to innovation in dental implant prosthetics.

We have always been true to our initial commitment to offering quality products to the dental world at a decent price, making the quality implant treatment affordable to everyone.

Novamind was among the first manufacturing companies that recognized the global tendency towards screw retained restorations. For that reason, we decided to offer all possible solutions for making screw retained restorations:

- **Castable plastics**
- **Co-Cr cast-on**
- **Ti-bases**
- **Custom restorations based on STL file**
- **Multi-unit abutments for all implant systems.**

  With Multi-unit abutments, we have succeeded in offering the so called **"one and only restorative platform"**, no matter the implant type.

All mentioned brand names in this catalogue are trademarks belonging to their respective companies.
The contents of this catalogue are subject to improvements or changes without any prior notice.

Digitalization: the digital era in implantology is already a reality.

Novamind was ready to respond to the high-tech demands of our time presenting a complete workflow and all the necessary components for a high precision digital restoration (photo digital work-flow). Scan bodies, digital analogs, Ti-bases of different types, and a free downloadable library for the most well-known designing software make the life of a clinician easier and time efficient.

Digitalization in implantology contributes drastically to the improvement of implant treatment quality, by offering:

- **Tension free restorations**
- **Stronger structures**
- **Predictability**
- **Repeatability**
- **Faster treatment**

Tissue friendly components:

All the Novamind abutments follow a modern concave design in the area of the emergence profile, especially in conical connection systems, bearing in mind all biological aspects and promoting the best possible adaptation with the soft tissue.

All mentioned brand names in this catalogue are trademarks belonging to their respective companies.
The contents of this catalogue are subject to improvements or changes without any prior notice.

Coding:
A few words about the coding philosophy of this catalogue to make the reading and ordering easier.

The code number consists of different parts separated with a dot. For example, an abutment with code 05.330.17.270 means the following:

05.	330.	17.	270.
The first two digits **(05)** represent the implant line of the catalogue	The next three digits **(330)** represent the diameter of the restorative platform	The next two digits **(17)** represent the inclination in degrees. In this case 17°	The last three digits **(270)** represent the Gingiva Height of the transgingival part in this case is 2,7mm.

The Multi-unit abutments follow the above rules but before the code number there are the initials MU. Example: **MU.05.330.17.250**

For the groups of components, we have set a standard numbering:

Healing screws:
The two first parts are the same as above (05.330.) and the third part is 402,403,404,405 according to the height. A code 05.330.403 means line 05, diameter 3,3, height 3mm

Lab analogs:
Same rule, the first two parts for line and diameter the same and the third part always is 200. So, a code 05.330.200 means line 05, diameter 3,3 and for analog 200

Same philosophy, **impression posts open tray** technique the last part is 500 (05.330.500)

Impression posts closed tray technique the last part is 550 (05.330.550)

Plastic castables:
Two versions, with and without antirotation. For the first the last part of the code is 300 (05.330.300) and for the second it is 301 (05.330.301)

Cast-on Cobalt chrome:
Two versions, with and without antirotation. For the first the last part of the code is 710 (05.330.710) and for the second it is 711 (05.330.711)

Ti-Bases:
Two versions, with and without antirotation.
For the first the last part of the code is 600 and for the second it is 601. However, there is a last part that represents the GH. So, the full code of the Ti-Bases is (05.330.600.05) and (05.330.601.05) GH is 0,5 mm

Over-lock over-denture abutments:
The third part of the code is 801,802,803, 804. The last digit shows the height of the abutment (05.330.801) height 1mm

All mentioned brand names in this catalogue are trademarks belonging to their respective companies.
The contents of this catalogue are subject to improvements or changes without any prior notice.

Let’s make

COMPATIBLE WITH :

yellow line.1 — XIVE FRIALIT DENTSPLY® implants — 8

orange line.2 — STRAUMANN SOFT TISSUE LEVEL RN SYSTEM® implants — 15

green line.3 — BIOMET 3i CERTAIN® implants — 21

blue line.4 — NOBEL REPLACE SELECT® implants — 27

red line.5 — STRAUMANN BONE LEVEL® implants — 33

purple line.6 — MIS SEVEN® implants — 39

All mentioned brand names in this catalogue are trademarks belonging to their respective companies.

All mentioned brand names in this catalogue are trademarks belonging to their respective companies.
The contents of this catalogue are subject to improvements or changes without any prior notice.

brown line.8

cyan line.10

olive line.11

black line.12

petrol line.33

COMPATIBLE WITH :

NOBEL ACTIVE® implants ____ **45**

Bredent Blue Sky® implants ____ **50**

Implantium-Dentium® implants ____ **56**

Megagen anyridge series® implants ____ **62**

3i External Hex® implants ____ **68**

implant works

All mentioned brand names in this catalogue are trademarks belonging to their respective companies.
The contents of this catalogue are subject to improvements or changes without any prior notice.

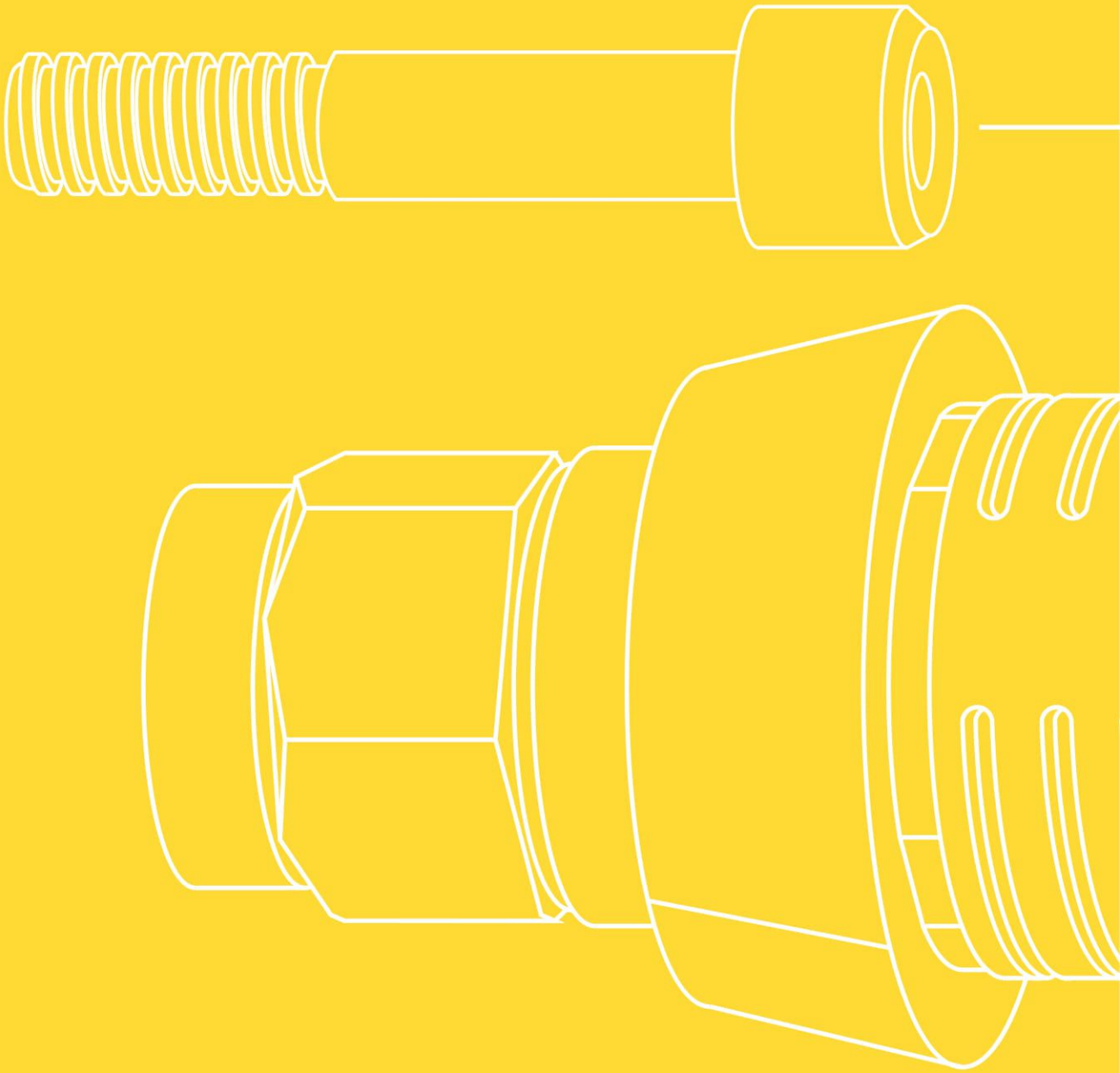

Yellow Line.1

Prosthetic components compatible with
XIVE FRIALIT® DENTSPLY implants

Titanium Grade 5

01.100

01.

Yellow Line.1

Titanium grade 5

Prosthetic components compatible with
XIVE FRIALIT® DENTSPLY implants

Healing Screws.

Ref. Number	Diameter ∅	Height (mm)
01.340.403	3.4	3
01.340.405	3.4	5
01.380.403	3.8	3
01.380.405	3.8	5
01.450.403	4.5	3
01.450.405	4.5	5
01.550.403	5.5	3
01.550.405	5.5	5

Lab Analogs.

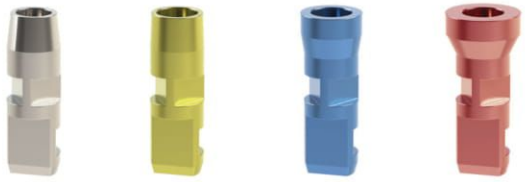

Ref. Number	Diameter ∅
01.340.200	3.4
01.380.200	3.8
01.450.200	4.5
01.550.200	5.5

✳ **Novamind Lab Analogs can be used either on PLASTER MODEL or on 3D PRINTED MODEL (Digital Analog)**

Impression Posts.

Ref. Number	Diameter ∅	Impression Method
01.340.500	3.4	Open Tray
01.340.550	3.4	Closed Tray
01.380.500	3.8	Open Tray
01.380.550	3.8	Closed Tray
01.450.500	4.5	Open Tray
01.450.550	4.5	Closed Tray
01.550.500	5.5	Open Tray
01.550.550	5.5	Closed Tray

⬢ **Screw Ref. Number:** Open Tray 01.500.100
Closed tray: 01.100

Scan Bodies.

Ref. Number	Diameter ∅
01.340.SA	3.4
01.380.SA	3.8
01.450.SA	4.5
01.550.SA	5.5

⬢ **Screw Ref. Number:** 01.100

✳ **Novamind Scan Bodies are used only in combination to Novamind Free Libraries either with Novamind TI-BASES or directly on implant restorative platforms. Scan Bodies are made of peek and are easily scanned with intra-oral and desktop scanners.**

All mentioned brand names in this catalogue are trademarks belonging to their respective companies.
The contents of this catalogue are subject to improvements or changes without any prior notice.

Yellow Line.1

Prosthetic components compatible with
XIVE FRIALIT® DENTSPLY implants

Ti-Bases.

* **Novamind TI-BASES are colored with a warm Golden Hue for better aesthetic effect. They are available in two types, with and without antirotation depending on the type of restoration (crown or bridge)**

R Anti-Rotation

R NO Anti-rotation

Ref. Number	Diameter ∅	Gingiva Height (mm)
01.340.600.05	3.4	0,5
01.340.600.15	3.4	1,5
01.340.601.05	3.4	0,5
01.340.601.15	3.4	1,5
01.380.600.05	3.8	0,5
01.380.600.15	3.8	1,5
01.380.601.05	3.8	0,5
01.380.601.15	3.8	1,5
01.450.600.05	4.5	0,5
01.450.600.15	4.5	1,5
01.450.601.05	4.5	0,5
01.450.601.15	4.5	1,5
01.550.600.05	5.5	0,5
01.550.600.15	5.5	1,5
01.550.601.05	5.5	0,5
01.550.601.15	5.5	1,5

Screw Ref. Number: 01.100

Titanium Abutments for cemented restorations.

Ref. Number	Diameter ∅	Angulation Degrees(°)	Gingiva Height (mm)
01.340.00.120	3.4	0 °	1,2
01.340.00.270	3.4	0 °	2,7
01.340.00.370	3.4	0 °	3,7
01.340.17.120	3.4	17 °	1,2
01.340.17.270	3.4	17 °	2,7
01.340.17.370	3.4	17 °	3,7
01.380.00.120	3.8	0 °	1,2
01.380.00.270	3.8	0 °	2,7
01.380.00.370	3.8	0 °	3,7
01.380.17.120	3.8	17 °	1,2
01.380.17.270	3.8	17 °	2,7
01.380.17.370	3.8	17 °	3,7
01.450.00.120	4.5	0 °	1,2
01.450.00.270	4.5	0 °	2,7
01.450.00.370	4.5	0 °	3,7
01.450.17.120	4.5	17 °	1,2
01.450.17.270	4.5	17 °	2,7
01.450.17.370	4.5	17 °	3,7
01.550.00.120	5.5	0 °	1,2
01.550.00.270	5.5	0 °	2,7
01.550.00.370	5.5	0 °	3,7
01.550.17.120	5.5	17 °	1,2
01.550.17.270	5.5	17 °	2,7
01.550.17.370	5.5	17 °	3,7

Screw Ref. Number: 01.100

All mentioned brand names in this catalogue are trademarks belonging to their respective companies.
The contents of this catalogue are subject to improvements or changes without any prior notice.

Yellow Line.1

Titanium grade 5

Prosthetic components compatible with
XIVE FRIALIT® DENTSPLY implants

Castable Abutments.

* **Two types of castable abutments are available. One is fully plastic and one is with pre-fabricated Co-Cr Implant connection for cast-on.**

R Anti-Rotation

NO Anti-rotation

	Ref. Number	Diameter ∅
R	01.340.300	3.4
	01.340.301	3.4
R	01.340.710	3.4
	01.340.711	3.4
R	01.380.300	3.8
	01.380.301	3.8
R	01.380.710	3.8
	01.380.711	3.8
R	01.450.300	4.5
	01.450.301	4.5
R	01.450.710	4.5
	01.450.711	4.5
R	01.550.300	5.5
	01.550.301	5.5
R	01.550.710	5.5
	01.550.711	5.5

Screw Ref. Number: 01.100 / 01.100PL

Overdenture Over-Lock Abutments.

* **Over-Locks are compatible to locator abutments for overdentures. 5 different Heights.**

Ref. Number	Diameter ∅	Height (mm)
01.340.801	3.4	1
01.340.802	3.4	2
01.340.803	3.4	3
01.340.804	3.4	4
01.340.805	3.4	5
01.380.801	3.8	1
01.380.802	3.8	2
01.380.803	3.8	3
01.380.804	3.8	4
01.380.805	3.8	5
01.450.801	4.5	1
01.450.802	4.5	2
01.450.803	4.5	3
01.450.804	4.5	4

All mentioned brand names in this catalogue are trademarks belonging to their respective companies.
The contents of this catalogue are subject to improvements or changes without any prior notice.

Yellow Line.1

Prosthetic components compatible with
XIVE FRIALIT® DENTSPLY implants

Overlock Standard Retention Kit.

* **Available either as a set or individually. They are used in cases where the total angulation axis among implants does not exceed 15°.**

Description	Reference Number
Metal Housing	MH800
Black Lab Plastic	PL.800.BLACK
Blue Plastic Light Retention 0,68 KG	PL.800.BLUE
Grey Plastic Medium Retention 1,36 KG	PL.800.GREY
Clear Plastic Strong Retention 2,26 KG	PL.800.CLEAR

Overlock Extended Retention Kit with no Core.

* **Available either as a set or individually. They are used in cases where the total angulation axis among implants exceeds 15°.**

Description	Reference Number
Metal Housing	MH800
Black Lab Plastic	PL.800.BLACK
Red Plastic Light Retention 0,68 KG	PL.800.RED
Orange Plastic Medium Retention 1,36 KG	PL.800.ORANGE
Green Plastic Strong Retention 2,26 KG	PL.800.GREEN

Titanium Temporary Cylinders.

* **Chairside use or indirect in lab. With and without antirotation depending on the type of restoration (crown or bridge). Golden warm hue for better aesthetics.**

Ref. Number	Diameter ∅
01.340.900	3.4
01.340.901	3.4
01.380.900	3.8
01.380.901	3.8
01.450.900	4.5
01.450.901	4.5
01.550.900	5.5
01.550.901	5.5

Screw Ref. Number: 01.100

R Anti-Rotation

R NO Anti-rotation

All mentioned brand names in this catalogue are trademarks belonging to their respective companies.
The contents of this catalogue are subject to improvements or changes without any prior notice.

Yellow Line.1

Titanium grade 5

Prosthetic components compatible with
XIVE FRIALIT® DENTSPLY implants

Multi-Unit Abutments.

* **Multi-unit abutments is currently the most accepted and highly recommended solution in screw retained restorations. They have many advantages such as a common prosthetic platform for all implants.**

Ref. Number	Diameter ∅	Angulation Degrees(°)	Gingiva Height (mm)
MU.01.340.00.100	3.4	0 °	1,0
MU.01.340.00.200	3.4	0 °	2,0
MU.01.340.00.300	3.4	0 °	3,0
MU.01.340.00.400	3.4	0 °	4,0
MU.01.380.00.100	3.8	0 °	1,0
MU.01.380.00.200	3.8	0 °	2,0
MU.01.380.00.300	3.8	0 °	3,0
MU.01.380.00.400	3.8	0 °	4,0
MU.01.450.00.100	4,5	0 °	1,0
MU.01.450.00.200	4,5	0 °	2,0
MU.01.450.00.300	4,5	0 °	3,0
MU.01.450.00.400	4,5	0 °	4,0

Multi-Unit Prosthetic System.

* **Multi-Unit has its own prosthetic components, the same for all implant systems.**

Description	Reference Number
Healing Screw	MU.402
Impression Post Open Tray	MU.500
Scan Abutment	MU.SA
Lab Analog	MU.200
Plastic Castable	MU.301
Ti-Base	MU.601
Titanium Temporary Cylinder	MU.901

Screw Ref. Number: MU.500.100
MU.100

All mentioned brand names in this catalogue are trademarks belonging to their respective companies.
The contents of this catalogue are subject to improvements or changes without any prior notice.

Titanium Grade 5

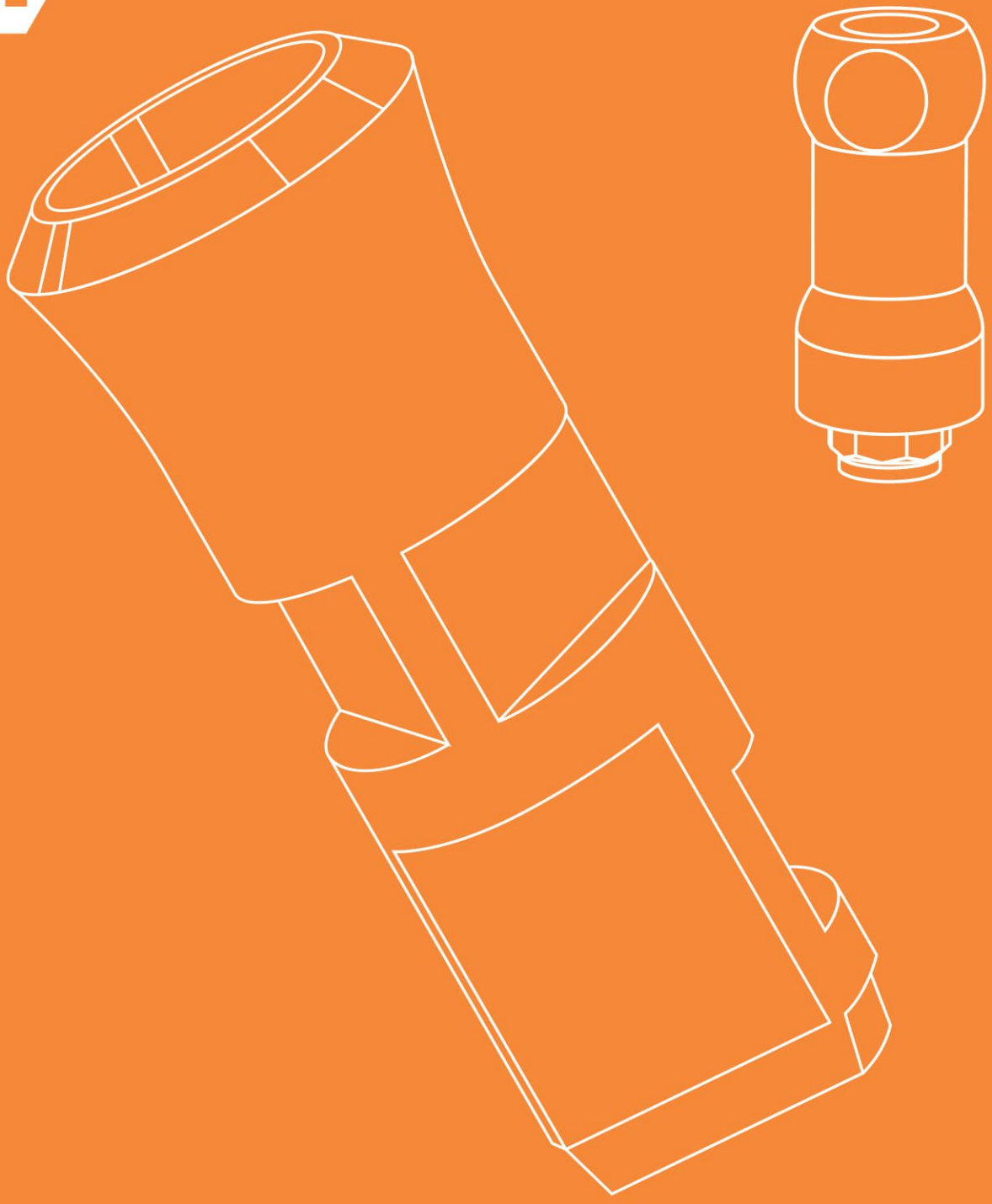

Orange Line.2

Prosthetic components compatible with
STRAUMANN SOFT TISSUE LEVEL RN SYSTEM® implants

Orange Line.2

Titanium grade 5

Prosthetic components compatible with
STRAUMAN SOFT TISSUE LEVEL® RN SYSTEM implants

Healing Screws.

Ref. Number	Diameter ∅	Height (mm)
02.480.402	4.8	2
02.480.403	4.8	3
02.480.404	4.8	4
02.480.405	4.8	5
02.650.402	6.5	2
02.650.403	6.5	3
02.650.404	6.5	4

Lab Analogs.

Ref. Number	Diameter ∅
02.480.200	4.8
02.650.200	6.5

* **Only one lab analog for both methods (impression or scanning)**

Impression Posts.

Ref. Number	Diameter ∅	Impression Method
02.480.500	4.8	Open Tray
02.480.550	4.8	Closed Tray
02.650.500	6.5	Open Tray
02.650.550	6.5	Closed Tray

⬢ **Screw Ref. Number:** Open Tray: 02.500.100
Closed Tray: 02.100

Scan Bodies.

Ref. Number	Diameter ∅
02.480.SA	4.8
02.650.SA	6.5

⬢ **Screw Ref. Number:** 02.100CAD/CAM

* **Novamind scan bodies are used only in combination to novamind free libraries either with novamind ti-bases or directly on implant restorative platforms. Scan Bodies are made of peek and are easily scanned with intra-oral and desktrop scanners.**

All mentioned brand names in this catalogue are trademarks belonging to their respective companies.
The contents of this catalogue are subject to improvements or changes without any prior notice.

Orange Line.2

Prosthetic components compatible with
STRAUMAN SOFT TISSUE LEVEL® RN SYSTEM implants

Ti-Bases.

Ref. Number	Diameter ∅	Gingiva Height (mm)
02.480.600.05	4.8	0,5
02.480.600.15	4.8	1,5
02.480.601.05	4.8	0,5
02.480.601.15	4.8	1,5
02.650.600.05	6.5	0,5
02.650.600.15	6.5	1,5
02.650.601.05	6.5	0,5
02.650.601.15	6.5	1,5

✳ **Novamind TI-BASES are colored with a warm Golden Hue for better aesthetic effect. They are available in two types, with and without antirotation depending on the type of restoration (crown or bridge)**

Screw Ref. Number: 02.100.IN

Anti-Rotation

NO Anti-rotation

Titanium Abutments for cemented restorations.

Ref. Number	Diameter ∅	Angulation Degrees(°)
02.480.00	4.8	0 °
02.480.17A*	4.8	17 °
02.480.17B**	4.8	17 °
02.480.23A*	4.8	23 °
02.480.23B**	4.8	23 °
02.650.00	6.5	0 °
02.650.17A*	6.5	17 °
02.650.17B**	6.5	17 °

Screw Ref. Number: 02.100

✳ **Available in different degrees of angulation 0°, 17°,23°. Two different angulation options.**

* Angulation towards the side of the octagon
** Angulation towards the corner of the octagon

All mentioned brand names in this catalogue are trademarks belonging to their respective companies.
The contents of this catalogue are subject to improvements or changes without any prior notice.

Orange Line.2

Titanium grade 5

Prosthetic components compatible with
STRAUMAN SOFT TISSUE LEVEL® RN SYSTEM implants

Titanium Solid One Piece Abutments for Cemented Restorations.

Ref. Number	Diameter ∅	Height (mm)
02.480.40	4.8	4
02.480.55	4.8	5.5
02.480.70	4.8	7
02.480.90	4.8	9

* **Available in 4 different Heights**

Castable Abutments.

	Ref. Number	Diameter ∅
R	02.480.300	4.8
R	02.480.301	4.8
R	02.480.710	4.8
R	02.480.711	4.8
R	02.650.300	6.5
R	02.650.301	6.5
R	02.650.710	6.5
R	02.650.711	6.5

R Anti-Rotation

R NO Anti-rotation

Screw Ref. Number: 02.100.P-PL
02.100.IN

* **Two types of castable abutments are available. One is fully plastic and one is with pre-fabricated Co-Cr implant connection for cast-on.**

Overdenture Over-Lock Abutments.

Ref. Number	Diameter ∅	Height (mm)
02.480.801	4.8	1
02.480.802	4.8	2
02.480.803	4.8	3
02.480.804	4.8	4
02.480.805	4.8	5

* **Over-Locks are compatible to locator abutments for overdentures. 5 different Heights.**

All mentioned brand names in this catalogue are trademarks belonging to their respective companies.
The contents of this catalogue are subject to improvements or changes without any prior notice.

Orange Line.2

Prosthetic components compatible with
STRAUMAN SOFT TISSUE LEVEL® RN SYSTEM implants

Overlock Standard Retention Kit.

* **Available either as a set or individually. They are used in cases where the total angulation axis among implants does not exceed 15°.**

Description	Reference Number
Metal Housing	MH800
Black Lab Plastic	PL.800.BLACK
Blue Plastic Light Retention 0,68 KG	PL.800.BLUE
Grey Plastic Medium Retention 1,36 KG	PL.800.GREY
Clear Plastic Strong Retention 2,26 KG	PL.800.CLEAR

Overlock Extended Retention Kit with no Core.

* **Available either as a set or individually. They are used in cases where the total angulation axis among implants exceeds 15°.**

Description	Reference Number
Metal Housing	MH800
Black Lab Plastic	PL.800.BLACK
Red Plastic Light Retention 0,68 KG	PL.800.RED
Orange Plastic Medium Retention 1,36 KG	PL.800.ORANGE
Green Plastic Strong Retention 2,26 KG	PL.800.GREEN

Overdenture Ball Abuntments.

Ref. Number	Diameter ∅	Height (mm)
02.480.851	4.8	1
02.480.853	4.8	3

* Ball Abutments for overdentures. Available in 2 different heights. Ball Diameter 2,5mm.

Ball Abutment Retention Kit.

* **Available either as a set or individually.**

Description	Reference Number
Metal Housing	MH850
Pink Plastic Light Retention	PL.850.PINK
Clear Plastic Strong Retention	PL.850.CLEAR

All mentioned brand names in this catalogue are trademarks belonging to their respective companies.
The contents of this catalogue are subject to improvements or changes without any prior notice.

Orange Line.2

Titanium grade 5

Prosthetic components compatible with
STRAUMAN SOFT TISSUE LEVEL® RN SYSTEM implants

Titanium Temporary Cylinders.

Ref. Number	Diameter ∅
02.480.900	4.8
02.480.901	4.8
02.650.900	6.5
02.650.901	6.5

Anti-Rotation

NO Anti-rotation

Screw Ref. Number: 02.100

* **Chairside use or indirect in lab. With and without antirotation depending on the type of restoration (crown or bridge). Golden warm hue for better aesthetics.**

Synocta Type Screw Retained Abutment System.

Ref. Number	Diameter ∅	Height (mm)
MU.02.480.00	4.8	1.5

Plastic Castables for Synocta Type Screw Retained Abutment.

Ref. Number	Diameter ∅
MU.02.480.300	4.8
MU.02.480.301	4.8

Screw Ref. Number: MU.02.480.100

All mentioned brand names in this catalogue are trademarks belonging to their respective companies.
The contents of this catalogue are subject to improvements or changes without any prior notice.

Titanium Grade 5

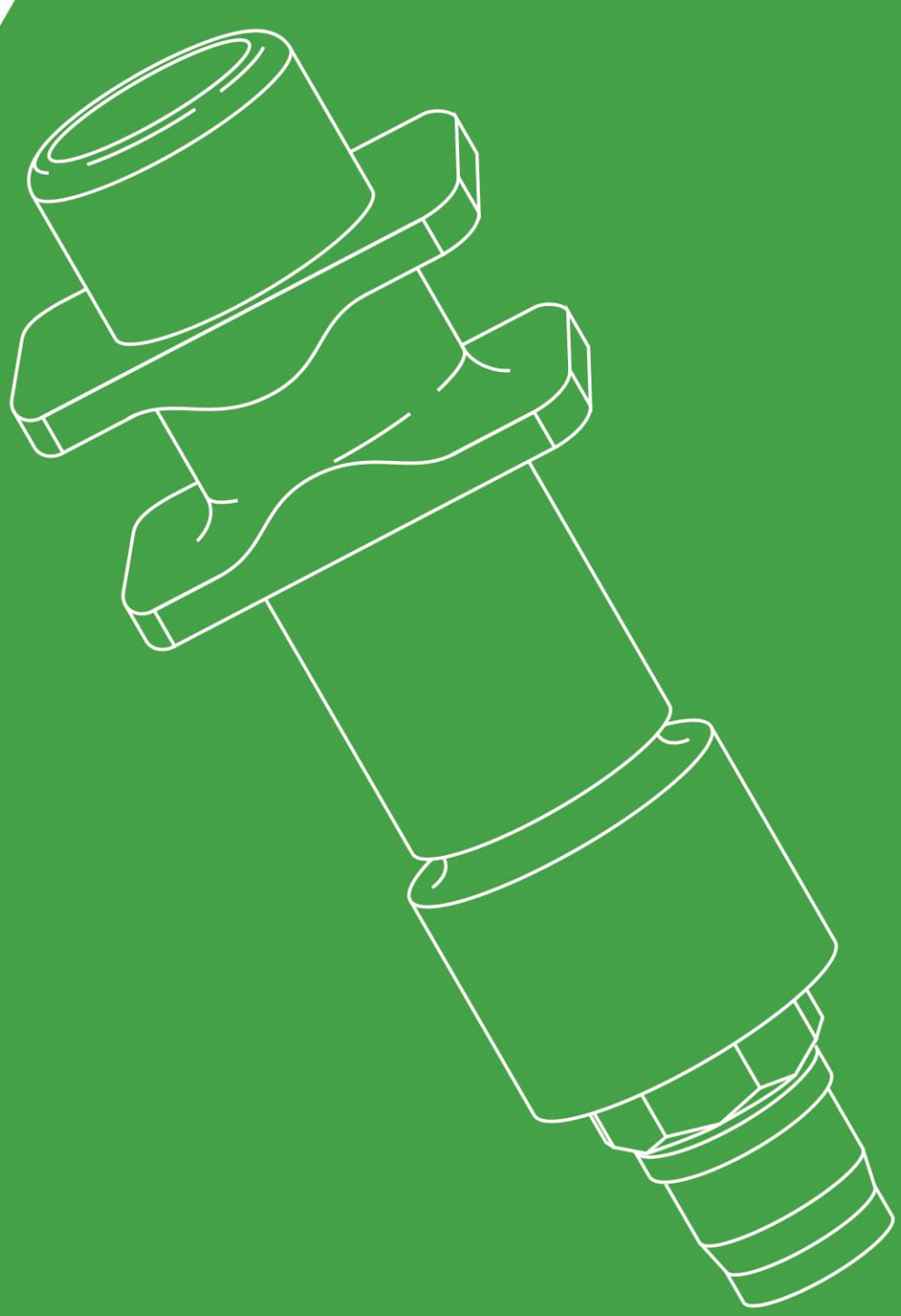

03.500.100

Green Line.3

Prosthetic components compatible with
BIOMET 3i CERTAIN® implants

Green Line.3

Titanium grade 5

Prosthetic components compatible with
BIOMET 3i CERTAIN® implants

Healing Screws.

Ref. Number	Diameter ∅	Height (mm)
03.340.403	3.4	3
03.340.405	3.4	5
03.410.403	4.1	3
03.410.405	4.1	5
03.500.403	5.0	3
03.500.405	5.0	5

Lab Analogs.

Ref. Number	Diameter ∅
03.340.200	3.4
03.410.200	4.1
03.500.200	5.0

* **Only one lab analog for both methods (impression or scanning)**

Impression Posts.

Ref. Number	Diameter ∅	Impression Method
03.340.500	3.4	Open Tray
03.340.550	3.4	Closed Tray
03.410.500	4.1	Open Tray
03.410.550	4.1	Closed Tray
03.500.500	5.0	Open Tray
03.500.550	5.0	Closed Tray

⬢ **Screw Ref. Number:** Open Tray: 03.500.100
Closed Tray: 03.100

Scan Bodies.

Ref. Number	Diameter ∅
03.340.SA	3.4
03.410.SA	4.1
03.500.SA	5.0

⬢ **Screw Ref. Number:** 03.100

* **Novamind scan bodies are used only in combination to novamind free libraries either with novamind ti-bases or directly on implant restorative platforms. Scan Bodies are made of peek and are easily scanned with intra-oral and desktop scanners.**

All mentioned brand names in this catalogue are trademarks belonging to their respective companies.
The contents of this catalogue are subject to improvements or changes without any prior notice.

Green Line.3

Prosthetic components compatible with
BIOMET 3i CERTAIN® implants

Ti-Bases.

* **Novamind TI-BASES are colored with a warm Golden Hue for better aesthetic effect. They are available in two types, with and without antirotation depending on the type of restoration (crown or bridge)**

Ref. Number	Diameter ∅	Gingiva Height (mm)
03.340.600.05	3.4	0.5
03.340.600.15	3.4	1.5
03.340.601.05	3.4	0.5
03.340.601.15	3.4	1.5
03.410.600.05	4.1	0.5
03.410.600.15	4.1	1.5
03.410.601.05	4.1	0.5
03.410.601.15	4.1	1.5
03.500.600.05	5.0	0.5
03.500.600.15	5.0	1.5
03.500.601.05	5.0	0.5
03.500.601.15	5.0	1.5

Screw Ref. Number: 03.100

R Anti-Rotation

R NO Anti-rotation

Titanium Abutments for Cemented Restorations.

* **Available in different degrees of angulation 0°, 17°, and in some cases 23°. Three different gingiva height collars to optimize the best possible emergence profile.**

Ref. Number	Diameter ∅	Angulation Degrees(°)	Gingiva Height (mm)
03.340.00.120	3.4	0 °	1.2
03.340.00.270	3.4	0 °	2.7
03.340.00.370	3.4	0 °	3.7
03.340.17.120	3.4	17 °	1.2
03.340.17.270	3.4	17 °	2.7
03.340.17.370	3.4	17 °	3.7
03.410.00.120	4.1	0 °	1.2
03.410.00.270	4.1	0 °	2.7
03.410.00.370	4.1	0 °	3.7
03.410.17.120	4.1	17 °	1.2
03.410.17.270	4.1	17 °	2.7
03.410.17.370	4.1	17 °	3.7
03.500.00.120	5.0	0 °	1.2
03.500.00.270	5.0	0 °	2.7
03.500.00.370	5.0	0 °	3.7
03.500.17.120	5.0	17 °	1.2
03.500.17.270	5.0	17 °	2.7
03.500.17.370	5.0	17 °	3.7

Screw Ref. Number: 03.100

All mentioned brand names in this catalogue are trademarks belonging to their respective companies.
The contents of this catalogue are subject to improvements or changes without any prior notice.

Green Line.3

Titanium grade 5

Prosthetic components compatible with
BIOMET 3i CERTAIN® implants

Castable Abutments.

Ref. Number	Diameter ∅	
03.340.300	3.4	Anti-Rotation
03.340.301	3.4	NO Anti-rotation
03.340.710	3.4	
03.340.711	3.4	
03.410.300	4.1	
03.410.301	4.1	
03.410.710	4.1	
03.410.711	4.1	
03.500.300	5.0	
03.500.301	5.0	
03.500.710	5.0	
03.500.711	5.0	

* **Two types of castable abutments are available. One is fully plastic and one is with pre-fabricated Co-Cr implant connection for cast-on.**

Screw Ref. Number: 03.100 / 03.100PL

Overdenture Over-Lock Abutments.

Ref. Number	Diameter ∅	Height (mm)
03.340.801	3.4	1
03.340.802	3.4	2
03.340.803	3.4	3
03.340.804	3.4	4
03.410.801	4.1	1
03.410.802	4.1	2
03.410.803	4.1	3
03.410.804	4.1	4
03.500.801	5.0	1
03.500.802	5.0	2
03.500.803	5.0	3
03.500.804	5.0	4

* **Over-Locks are compatible to locator abutments for overdentures. 4 different Heights.**

Overlock Standard Retantion Kit.

Description	Reference Number
Metal Housing	MH800
Black Lab Plastic	PL.800.BLACK
Blue Plastic Light Retention 0,68 KG	PL.800.BLUE
Grey Plastic Medium Retention 1,36 KG	PL.800.GREY
Clear Plastic Strong Retention 2,26 KG	PL.800.CLEAR

* **Available either as a set or individually. They are used in cases where the total angulation axis among implants does not exceed 15°.**

All mentioned brand names in this catalogue are trademarks belonging to their respective companies.
The contents of this catalogue are subject to improvements or changes without any prior notice.

Green Line.3

Prosthetic components compatible with
BIOMET 3i CERTAIN® implants

Overlock Extended Retention Kit with no Core.

Description	Reference Number
Metal Housing	MH800
Black Lab Plastic	PL.800.BLACK
Red Plastic Light Retention 0,68 KG	PL.800.RED
Orange Plastic Medium Retention 1,36 KG	PL.800.ORANGE
Green Plastic Strong Retention 2,26 KG	PL.800.GREEN

* **Available either as a set or individually. They are used in cases where the total angulation axis among implants exceeds 15°.**

Titanium Temporary Cylinders.

Ref. Number	Diameter ∅
03.340.900	3.4
03.340.901	3.4
03.410.900	4.1
03.410.901	4.1
03.500.900	5.0
03.500.901	5.0

Screw Ref. Number: 03.100

Anti-Rotation

NO Anti-rotation

* **Chairside use or indirect in lab. With and without antirotation depending on the type of restoration (crown or bridge). Golden warm hue for better aesthetics.**

Multi-Unit Abutments.

Ref. Number	Diameter ∅	Angulation Degrees(°)	Gingiva Height (mm)
MU.03.340.00.100	3.4	0 °	1.0
MU.03.340.00.200	3.4	0 °	2.0
MU.03.340.00.300	3.4	0 °	3.0
MU.03.340.00.400	3.4	0 °	4.0
MU.03.410.00.100	4.1	0 °	1.0
MU.03.410.00.200	4.1	0 °	2.0
MU.03.410.00.300	4.1	0 °	3.0
MU.03.410.00.400	4.1	0 °	4.0
MU.03.500.00.100	5.0	0 °	1.0
MU.03.500.00.200	5.0	0 °	2.0
MU.03.500.00.300	5.0	0 °	3.0
MU.03.500.00.400	5.0	0 °	4.0

* **Multi-unit abutments is currently the most accepted and highly recommended solution in screw retained restorations. They have many advantages such as a common prosthetic platform for all implants.**

All mentioned brand names in this catalogue are trademarks belonging to their respective companies.
The contents of this catalogue are subject to improvements or changes without any prior notice.

Green Line.3

Prosthetic components compatible with
BIOMET 3i CERTAIN® implants

Multi-Unit Prosthetic System.

Description	Reference Number
Healing Screw	MU.402
Impression Post Open Tray	MU.500
Scan Abutment	MU.SA
Lab Analog	MU.200
Plastic Castable	MU.301
Ti-Base	MU.601
Titanium Temporary Cylinder	MU.901

Screw Ref. Number: MU.500.100
MU.100

Multi-Unit has its own prosthetic components, the same for all implant systems.

All mentioned brand names in this catalogue are trademarks belonging to their respective companies.
The contents of this catalogue are subject to improvements or changes without any prior notice.

Titanium Grade 5

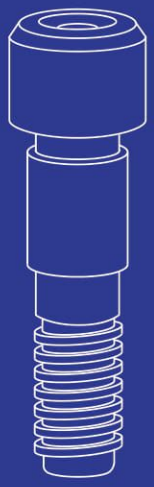

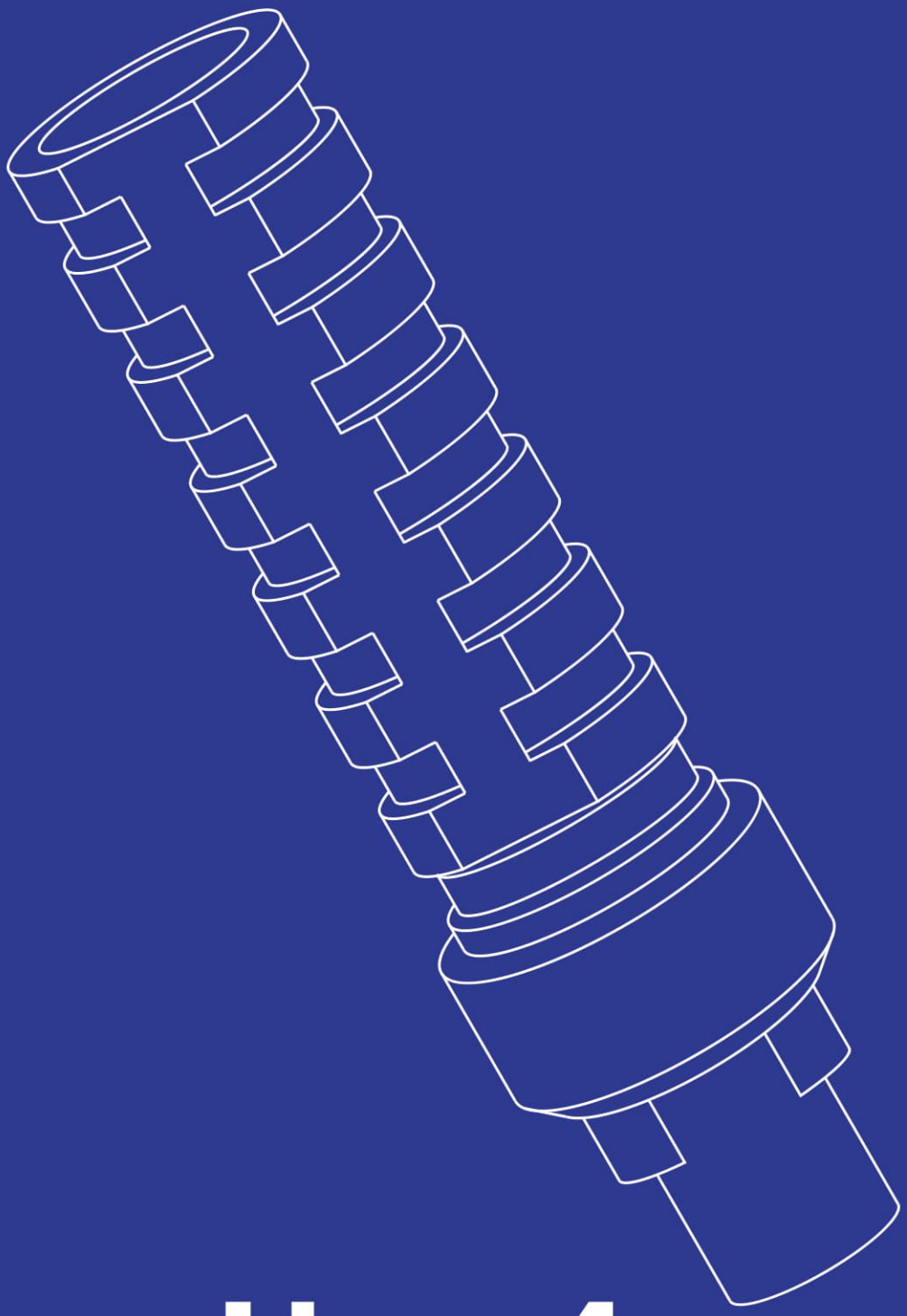

04.350.100

Blue Line.4

Prosthetic components compatible with
NOBEL REPLACE SELECT® implants

Blue Line.4

Titanium grade 5

Prosthetic components compatible with
NOBEL REPLACE SELECT® implants

Healing Screws.

Ref. Number	Diameter ∅	Height (mm)
04.350.403	3.5	3
04.350.405	3.5	5
04.430.403	4.3	3
04.430.405	4.3	5
04.500.403	5.0	3
04.500.405	5.0	5

Lab Analogs.

Ref. Number	Diameter ∅
04.350.200	3.5
04.430.200	4.3
04.500.200	5.0

* **Only one lab analog for both methods (impression or scanning)**

Impression Posts.

Ref. Number	Diameter ∅	Impression Method
04.350.500	3.5	Open Tray
04.350.550	3.5	Closed Tray
04.430.500	4.3	Open Tray
04.430.550	4.3	Closed Tray
04.500.500	5.0	Open Tray
04.500.550	5.0	Closed Tray

● **Screw Ref. Number:**
Open Tray: 04.350.500.100 / 04.430/500.500.100
Closed Tray: 04.350.100 / 04.430/500.100

Scan Bodies.

Ref. Number	Diameter ∅
04.350.SA	3.5
04.430.SA	4.3
04.500.SA	5.0

● **Screw Ref. Number:** 04.350.100
04.430/500.100

* **Novamind scan bodies are used only in combination to novamind free libraries either with novamind ti-bases or directly on implant restorative platforms. Scan Bodies are made of peek and are easily scanned with intra-oral and desktop scanners.**

All mentioned brand names in this catalogue are trademarks belonging to their respective companies.
The contents of this catalogue are subject to improvements or changes without any prior notice.

Blue Line.4

Prosthetic components compatible with
NOBEL REPLACE SELECT® implants

Ti-Bases.

* Novamind TI-BASES are colored with a warm Golden Hue for better aesthetic effect. They are available in two types, with and without antirotation depending on the type of restoration (crown or bridge)

Ref. Number	Diameter ∅	Gingiva Height (mm)
04.350.600.05	3.5	0.5
04.350.600.15	3.5	1.5
04.350.601.05	3.5	0.5
04.350.601.15	3.5	1.5
04.430.600.05	4.3	0.5
04.430.600.15	4.3	1.5
04.430.601.05	4.3	0.5
04.430.601.15	43	1.5
04.500.600.05	5.0	0.5
04.500.600.15	5.0	1.5
04.500.601.05	5.0	0.5
04.500.601.15	5.0	1.5

Anti-Rotation

NO Anti-rotation

Screw Ref. Number: 04.350.100IN
04.430/500.100

Titanium Abutments for Cemented Restorations.

* Available in different degrees of angulation 0°, 17°, and in some cases 23°. Three different gingiva height collars to optimize the best possible emergence profile.

Ref. Number	Diameter ∅	Angulation Degrees(°)	Gingiva Height (mm)
04.350.00.120	3.5	0 °	1.2
04.350.00.270	3.5	0 °	2.7
04.350.00.370	3.5	0 °	3.7
04.350.17.120	3.5	17 °	1.2
04.350.17.270	3.5	17 °	2.7
04.350.17.370	3.5	17 °	3.7
04.430.00.120	4.3	0 °	1.2
04.430.00.270	4.3	0 °	2.7
04.430.00.370	4.3	0 °	3.7
04.430.17.120	4.3	17 °	1.2
04.430.17.270	4.3	17 °	2.7
04.430.17.370	4.3	17 °	3.7
04.500.00.120	5.0	0 °	1.2
04.500.00.270	5.0	0 °	2.7
04.500.00.370	5.0	0 °	3.7
04.500.17.120	5.0	17 °	1.2
04.500.17.270	5.0	17 °	2.7
04.500.17.370	5.0	17 °	3.7

Screw Ref. Number: 04.350.100
04.430/500.100

All mentioned brand names in this catalogue are trademarks belonging to their respective companies.
The contents of this catalogue are subject to improvements or changes without any prior notice.

Blue Line.4

Titanium grade 5

Prosthetic components compatible with
NOBEL REPLACE SELECT® implants

Castable Abutments.

	Ref. Number	Diameter ∅
R	04.350.300	3.5
	04.350.301	3.5
R	04.350.710	3.5
	04.350.711	3.5
R	04.430.300	4.3
	04.430.301	4.3
R	04.430.710	4.3
	04.430.711	4.3
R	04.500.300	5.0
	04.500.301	5.0
R	04.500.710	5.0
	04.500.711	5.0

R Anti-Rotation

R NO Anti-rotation

Screw Ref. Number: 04.350.100
04.430/500.100

* **Two types of castable abutments are available. One is fully plastic and one is with pre-fabricated Co-Cr implant connection for cast-on.**

Overdenture Over-Lock Abutments.

Ref. Number	Diameter ∅	Height (mm)
04.350.801	3.5	1
04.350.802	3.5	2
04.350.803	3.5	3
04.350.804	3.5	4
04.430.801	4.3	1
04.430.802	4.3	2
04.430.803	4.3	3
04.430.804	4.3	4
04.500.801	5.0	1
04.500.802	5.0	2
04.500.803	5.0	3
04.500.804	5.0	4

* **Over-Locks are compatible to locator abutments for overdentures. 4 different Heights.**

Overlock Standard Retantion Kit.

Description	Reference Number
Metal Housing	MH800
Black Lab Plastic	PL.800.BLACK
Blue Plastic Light Retention 0,68 KG	PL.800.BLUE
Grey Plastic Medium Retention 1,36 KG	PL.800.GREY
Clear Plastic Strong Retention 2,26 KG	PL.800.CLEAR

* **Available either as a set or individually. They are used in cases where the total angulation axis among implants does not exceed 15°.**

All mentioned brand names in this catalogue are trademarks belonging to their respective companies.
The contents of this catalogue are subject to improvements or changes without any prior notice.

Blue Line.4

Prosthetic components compatible with
NOBEL REPLACE SELECT® implants

Overlock Extended Retention Kit with no Core.

* **Available either as a set or individually. They are used in cases where the total angulation axis among implants exceeds 15°.**

Description	Reference Number
Metal Housing	MH800
Black Lab Plastic	PL.800.BLACK
Red Plastic Light Retention 0,68 KG	PL.800.RED
Orange Plastic Medium Retention 1,36 KG	PL.800.ORANGE
Green Plastic Strong Retention 2,26 KG	PL.800.GREEN

Titanium Temporary Cylinders.

* **Chairside use or indirect in lab. With and without antirotation depending on the type of restoration (crown or bridge). Golden warm hue for better aesthetics.**

Ref. Number	Diameter ∅
04.350.900	3.5
04.350.901	3.5
04.430.900	4.3
04.430.901	4.3
04.500.900	5.0
04.500.901	5.0

Screw Ref. Number: 04.350.100
04.430/500.100

Anti-Rotation

NO Anti-rotation

Multi-Unit Abutments.

* **Multi-unit abutments is currently the most accepted and highly recommended solution in screw retained restorations. They have many advantages such as a common prosthetic platform for all implants.**

Ref. Number	Diameter ∅	Angulation Degrees(°)	Gingiva Height (mm)
MU.04.350.00.100	3.5	0 °	1.0
MU.04.350.00.200	3.5	0 °	2.0
MU.04.350.00.300	3.5	0 °	3.0
MU.04.350.00.400	3.5	0 °	4.0
MU.04.430.00.100	4.3	0 °	1.0
MU.04.430.00.200	4.3	0 °	2.0
MU.04.430.00.300	4.3	0 °	3.0
MU.04.430.00.400	4.3	0 °	4.0
MU.04.500.00.100	5.0	0 °	1.0
MU.04.500.00.200	5.0	0 °	2.0
MU.04.500.00.300	5.0	0 °	3.0
MU.04.500.00.400	5.0	0 °	4.0

All mentioned brand names in this catalogue are trademarks belonging to their respective companies.
The contents of this catalogue are subject to improvements or changes without any prior notice.

Blue Line.4

Prosthetic components compatible with
NOBEL REPLACE SELECT® implants

Multi-Unit Prosthetic System.

Description	Reference Number
Healing Screw	MU.402
Impression Post Open Tray	MU.500
Scan Abutment	MU.SA
Lab Analog	MU.200
Plastic Castable	MU.301
Ti-Base	MU.601
Titanium Temporary Cylinder	MU.901

Screw Ref. Number: MU.500.100
MU.100

* **Multi-Unit has its own prosthetic components, the same for all implant systems.**

All mentioned brand names in this catalogue are trademarks belonging to their respective companies.
The contents of this catalogue are subject to improvements or changes without any prior notice.

Titanium Grade 5

05.100

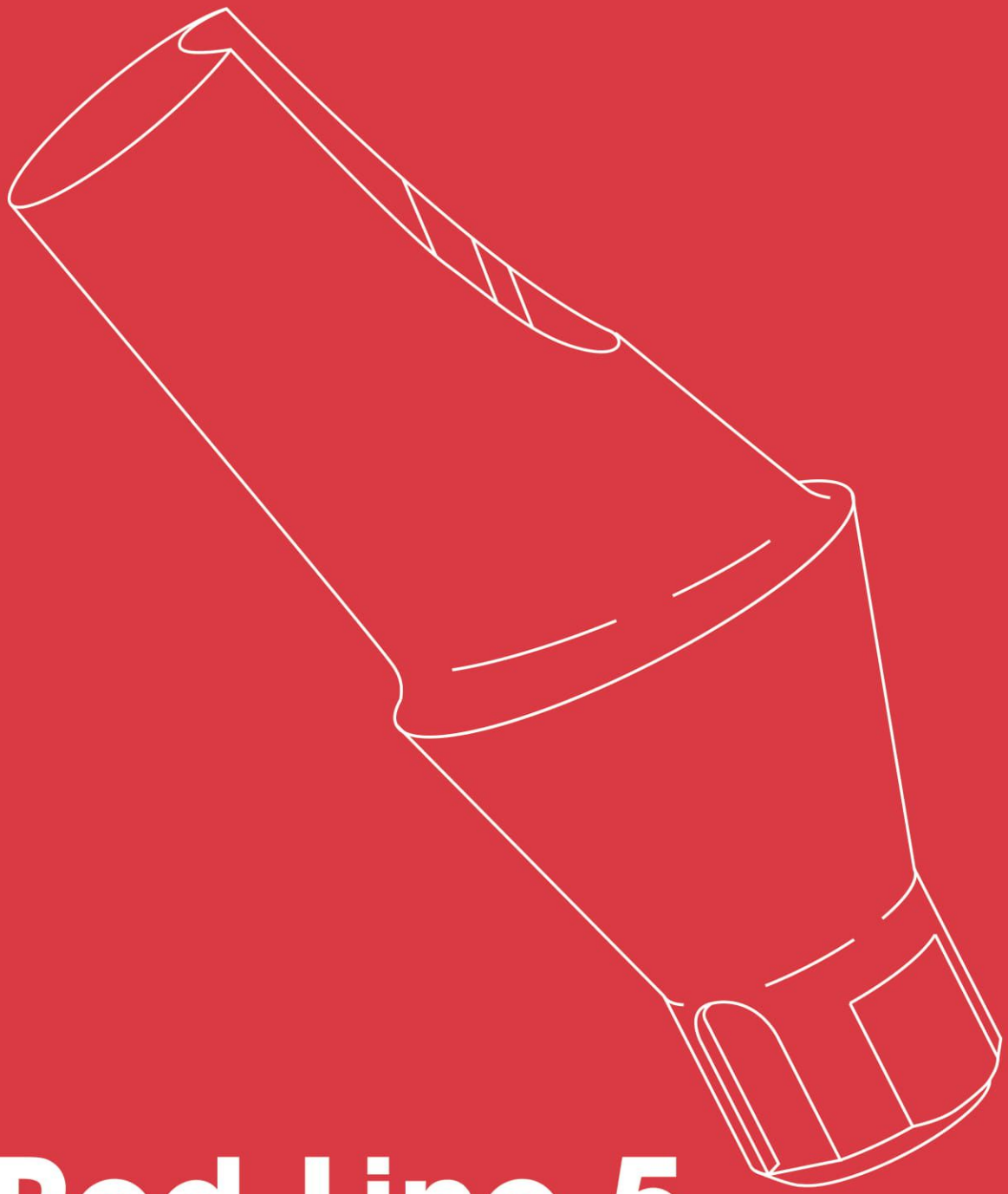

Red Line.5

Prosthetic components compatible with
STRAUMANN BONE LEVEL® implants

Red Line.5

Titanium grade 5

Prosthetic components compatible with
STRAUMANN BONE LEVEL® implants

Healing Screws.

Ref. Number	Diameter ∅	Height (mm)
05.330.403	3.3	3
05.330.405	3.3	5
05.410/480.403	4.1/4.8	3
05.410/480.405	4.1/4.8	5

Lab Analogs.

Ref. Number	Diameter ∅
05.330.200	3.3
05.410/480.200	4.1/4.8

✱ **Only one lab analog for both methods (impression or scanning)**

Impression Posts.

Ref. Number	Diameter ∅	Impression Method
05.330.500	3.3	Open Tray
05.330.550	3.3	Closed Tray
05.410/480.500	4.1/4.8	Open Tray
05.410/480.550	4.1/4.8	Closed Tray

⬢ **Screw Ref. Number:**
Open Tray: 05.330.500.100 / 05.410/480.500.100
Closed Tray 05.100

Scan Bodies.

Ref. Number	Diameter ∅
05.330.SA	3.3
05.410/480.SA	4.1/4.8

⬢ **Screw Ref. Number:** 05.100

✱ **Novamind scan bodies are used only in combination to novamind free libraries either with novamind ti-bases or directly on implant restorative platforms. Scan Bodies are made of peek and are easily scanned with intra-oral and desktop scanners.**

All mentioned brand names in this catalogue are trademarks belonging to their respective companies.
The contents of this catalogue are subject to improvements or changes without any prior notice.

Red Line.5

Prosthetic components compatible with
STRAUMANN BONE LEVEL® implants

Ti-Bases.

Ref. Number	Diameter ∅	Gingiva Height (mm)
05.330.600.10	3.3	1
05.330.600.20	3.3	2
05.330.601.10	3.3	1
05.330.601.20	3.3	2
05.410/480.600.10	4.1/4.8	1
05.410/480.600.20	4.1/4.8	2
05.410/480.601.10	4.1/4.8	1
05.410/480.601.20	4.1/4.8	2

Anti-Rotation

NO Anti-rotation

Screw Ref. Number: 05.100

Novamind TI-BASES are colored with a warm Golden Hue for better aesthetic effect. They are available in two types, with and without antirotation depending on the type of restoration (crown or bridge)

Titanium Abutments for Cemented Restorations.

Ref. Number	Diameter ∅	Angulation Degrees(°)	Gingiva Height (mm)
05.330.00.120	3.3	0 °	1,2
05.330.00.270	3.3	0 °	2,7
05.330.17.120	3.3	17 °	1,2
05.330.17.270	3.3	17 °	2,7
05.330.23.120	3.3	23 °	1,2
05.330.23.270	3.3	23 °	2,7
05.410/480.00.120	4.1/4.8	0 °	1,2
05.410/480.00.270	4.1/4.8	0 °	2,7
05.410/480.17.120	4.1/4.8	17 °	1,2
05.410/480.17.270	4.1/4.8	17 °	2,7
05.410/480.23.120	4.1/4.8	23 °	1,2
05.410/480.23.270	4.1/4.8	23 °	2,7

Screw Ref. Number: 05.100

Available in different degrees of angulation 0°, 17°,23°. Two different gingiva height collars to optimize the best possible emergence profile.

Castable Abutments.

Ref. Number	Diameter ∅
05.330.300	3.3
05.330.301	3.3
05.330.710	3.3
05.330.711	3.3
05.410/480.300	4.1/4.8
05.410/480.301	4.1/4.8
05.410/480.710	4.1/4.8
05.410/480.711	4.1/4.8

Screw Ref. Number: 05.100

Anti-Rotation

NO Anti-rotation

Two types of castable abutments are available. One is fully plastic and one is with pre-fabricated Co-Cr implant connection for cast-on.

All mentioned brand names in this catalogue are trademarks belonging to their respective companies.
The contents of this catalogue are subject to improvements or changes without any prior notice.

Red Line.5

Titanium grade 5

Prosthetic components compatible with
STRAUMANN BONE LEVEL® implants

Overdenture Over-Lock Abutments.

* **Over-Locks are compatible to locator abutments for overdentures. 4 different Heights.**

Ref. Number	Diameter ∅	Height (mm)
05.330.801	3.3	1
05.330.802	3.3	2
05.330.803	3.3	3
05.330.804	3.3	4
05.410/480.801	4,1/4,8	1
05.410/480.802	4,1/4,8	2
05.410/480.803	4,1/4,8	3
05.410/480.804	4,1/4,8	4

Overlock Standard Retention Kit.

* **Available either as a set or individually. They are used in cases where the total angulation axis among implants does not exceed 15°.**

Description	Reference Number
Metal Housing	MH800
Black Lab Plastic	PL.800.BLACK
Blue Plastic Light Retention 0,68 KG	PL.800.BLUE
Grey Plastic Medium Retention 1,36 KG	PL.800.GREY
Clear Plastic Strong Retention 2,26 KG	PL.800.CLEAR

Overlock Extended Retention Kit with no Core.

* **Available either as a set or individually. They are used in cases where the total angulation axis among implants exceeds 15°.**

Description	Reference Number
Metal Housing	MH800
Black Lab Plastic	PL.800.BLACK
Red Plastic Light Retention 0,68 KG	PL.800.RED
Orange Plastic Medium Retention 1,36 KG	PL.800.ORANGE
Green Plastic Strong Retention 2,26 KG	PL.800.GREEN

All mentioned brand names in this catalogue are trademarks belonging to their respective companies.
The contents of this catalogue are subject to improvements or changes without any prior notice.

Red Line.5

Prosthetic components compatible with
STRAUMANN BONE LEVEL® implants

Titanium Temporary Cylinders.

* **Chairside use or indirect in lab. With and without antirotation depending on the type of restoration (crown or bridge). Golden warm hue for better aesthetics.**

Ref. Number	Diameter ∅
05.330.900	3.3
05.330.901	3.3
05.410/480.900	4.1/4.8
05.410/480.901	4.1/4.8

Screw Ref. Number: 05.100

Anti-Rotation

NO Anti-rotation

Multi-Unit Abutments.

* **Multi-unit abutments is currently the most accepted and highly recommended solution in screw retained restorations. They have many advantages such as a common prosthetic platform for all implants.**

Ref. Number	Diameter ∅	Angulation Degrees(°)	Gingiva Height (mm)
MU.05.330.00.100	3.3	0 °	1.0
MU.05.330.00.200	3.3	0 °	2.0
MU.05.330.00.300	3.3	0 °	3.0
MU.05.330.00.400	3.3	0 °	4.0
MU.05.330.17.250	3.3	17 °	2.5
MU.05.330.17.350	3.3	17 °	3.5
MU.05.330.30.350	3.3	30 °	3.5
MU.05.330.30.450	3.3	30 °	4.5
MU.05.410/480.00.100	4.1/4.8	0 °	1.0
MU.05.410/480.00.200	4.1/4.8	0 °	2.0
MU.05.410/480.00.300	4.1/4.8	0 °	3.0
MU.05.410/480.00.400	4.1/4.8	0 °	4.0
MU.05.410/480.17.250	4.1/4.8	17 °	2.5
MU.05.410/480.17.350	4.1/4.8	17 °	3.5
MU.05.410/480.30.350	4.1/4.8	30 °	3.5
MU.05.410/480.30.450	4.1/4.8	30 °	4.5

Screw Ref. Number: 05.100

All mentioned brand names in this catalogue are trademarks belonging to their respective companies.
The contents of this catalogue are subject to improvements or changes without any prior notice.

Red Line.5

Prosthetic components compatible with
STRAUMANN BONE LEVEL® implants

Multi-Unit Prosthetic System.

Description	Reference Number
Healing Screw	MU.402
Impression Post Open Tray	MU.500
Scan Abutment	MU.SA
Lab Analog	MU.200
Plastic Castable	MU.301
Ti-Base	MU.601
Titanium Temporary Cylinder	MU.901

Screw Ref. Number: MU.500.100
MU.100

* **Multi-Unit has its own prosthetic components, the same for all implant systems.**

All mentioned brand names in this catalogue are trademarks belonging to their respective companies.
The contents of this catalogue are subject to improvements or changes without any prior notice.

Titanium Grade 5

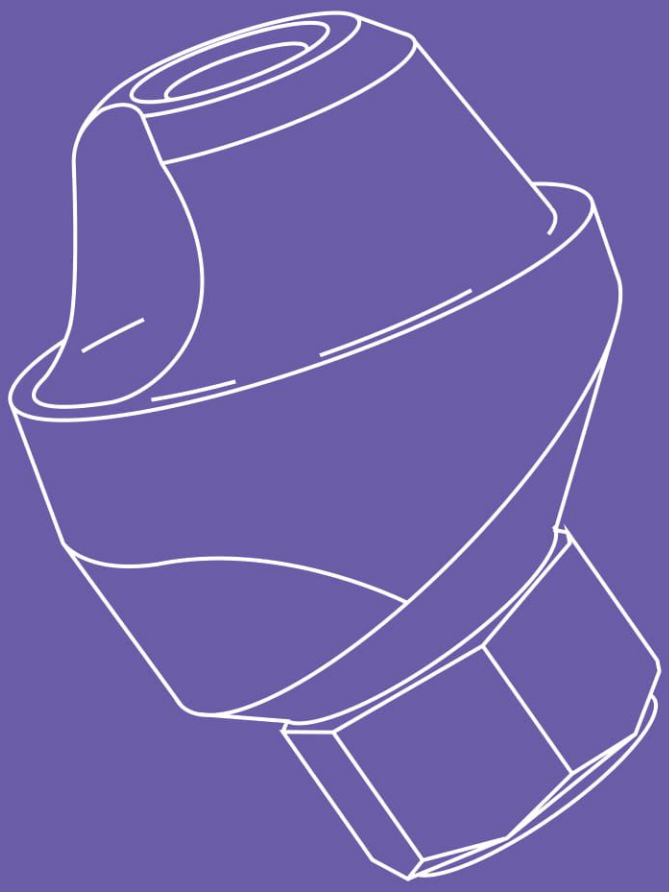

Purple Line.6

Prosthetic components compatible with
MIS SEVEN® implants

Purple Line.6

Titanium grade 5

Prosthetic components compatible with
MIS SEVEN® implants

Healing Screws.

Ref. Number	Diameter ∅	Height (mm)
06.330.403	3.3	3
06.330.405	3.3	5
06.375.403	3,75	3
06.375.405	3,75	5
06.450.403	4.5	3
06.450.405	4.5	5

Lab Analogs.

Ref. Number	Diameter ∅
06.330.200	3,3
06.375.200	3,75
06.450.200	4,5

✱ **Only one lab analog for both methods (impression or scanning)**

Impression Posts.

Ref. Number	Diameter ∅	Impression Method
06.330.500	3.3	Open Tray
06.330.550	3.3	Closed Tray
06.375.500	3,75	Open Tray
06.375.550	3,75	Closed Tray
06.450.500	4.5	Open Tray
06.450.550	4.5	Closed Tray

⬢ **Screw Ref. Number:**
Open Tray 06.330.500.100 / 06.500.100
Closed Tray 06.330.100 / 06.100

Scan Bodies.

Ref. Number	Diameter ∅
06.330.SA	3.3
06.375.SA	3.75
06.450.SA	4.5

⬢ **Screw Ref. Number:** 06.330.100 / 06.100

✱ **Novamind scan bodies are used only in combination to novamind free libraries either with novamind ti-bases or directly on implant restorative platforms. Scan Bodies are made of peek and are easily scanned with intra-oral and desktop scanners.**

All mentioned brand names in this catalogue are trademarks belonging to their respective companies.
The contents of this catalogue are subject to improvements or changes without any prior notice.

Purple Line.6

Prosthetic components compatible with
MIS SEVEN® implants

Ti-Bases.

* **Novamind TI-BASES are colored with a warm Golden Hue for better aesthetic effect. They are available in two types, with and without antirotation depending on the type of restoration (crown or bridge)**

Ref. Number	Diameter ∅	Gingiva Height (mm)
06.330.600.05	3.3	0,5
06.330.600.15	3.3	1,5
06.330.601.05	3.3	0,5
06.330.601.15	3.3	1,5
06.375.600.05	3,75	0,5
06.375.600.15	3,75	1,5
06.375.601.05	3,75	0,5
06.375.601.15	3,75	1,5
06.450.600.05	4,5	0,5
06.450.600.15	4,5	1,5
06.450.601.05	4,5	0,5
06.450.601.15	4,5	1,5

Anti-Rotation

NO Anti-rotation

Screw Ref. Number: 06.330.100 / 06.100

Titanium Abutments for Cemented Restorations.

* **Available in different degrees of angulation 0°, 17°, and in some cases 23°. Three different gingiva height collars to optimize the best possible emergence profile.**

Ref. Number	Diameter ∅	Angulation Degrees(°)	Gingiva Height (mm)
06.330.00.120	3.3	0 °	1,2
06.330.00.270	3.3	0 °	2,7
06.330.00.370	3.3	0 °	3,7
06.330.17.120	3.3	17 °	1,2
06.330.17.270	3.3	17 °	2,7
06.330.17.370	3.3	17 °	3,7
06.375.00.120	3.75	0 °	1,2
06.375.00.270	3.75	0 °	2,7
06.375.00.370	3.75	0 °	3,7
06.375.17.120	3.75	17 °	1,2
06.375.17.270	3.75	17 °	2,7
06.375.17.370	3.75	17 °	3,7
06.375.23.120	3.75	23 °	1,2
06.375.23.270	3.75	23 °	2,7
06.375.23.370	3.75	23 °	3,7
06.450.00.120	4.5	0 °	1,2
06.450.00.270	4.5	0 °	2,7
06.450.00.370	4.5	0 °	3,7
06.450.17.120	4.5	17 °	1,2
06.450.17.270	4.5	17 °	2,7
06.450.17.370	4.5	17 °	3,7
06.450.23.120	4.5	23 °	1,2
06.450.23.270	4.5	23 °	2,7
06.450.23.370	4.5	23 °	3,7

Screw Ref. Number: 06.330.100 / 06.100

All mentioned brand names in this catalogue are trademarks belonging to their respective companies.
The contents of this catalogue are subject to improvements or changes without any prior notice.

Purple Line.6

Titanium grade 5

Prosthetic components compatible with
MIS SEVEN® implants

Castable Abutments.

* **Two types of castable abutments are available. One is fully plastic and one is with pre-fabricated Co-Cr implant connection for cast-on.**

Ref. Number	Diameter ∅
06.330.300	3.3
06.330.301	3.3
06.330.710	3.3
06.330.711	3.3
06.375.300	3.75
06.375.301	3.75
06.375.710	3.75
06.375.711	3.75
06.450.300	4.5
06.450.301	4.5
06.450.710	4.5
06.450.711	4.5

R Anti-Rotation

R NO Anti-rotation

Screw Ref. Number: 06.330.100 / 06.100

Overdenture Over-Lock Abutments.

* **Over-Locks are compatible to locator abutments for overdentures. 5 different Heights.**

Ref. Number	Diameter ∅	Height (mm)
06.330.801	3.3	1
06.330.802	3.3	2
06.330.803	3.3	3
06.330.804	3.3	4
06.375.801	3.75	1
06.375.802	3.75	2
06.375.803	3.75	3
06.375.804	3.75	4
06.375.805	3.75	5
06.375.806	3.75	6
06.450.801	4.5	1
06.450.802	4.5	2
06.450.803	4.5	3
06.450.804	4.5	4

Overlock Standard Retention Kit.

* **Available either as a set or individually. They are used in cases where the total angulation axis among implants does not exceed 15°.**

Description	Reference Number
Metal Housing	MH800
Black Lab Plastic	PL.800.BLACK
Blue Plastic Light Retention 0,68 KG	PL.800.BLUE
Grey Plastic Medium Retention 1,36 KG	PL.800.GREY
Clear Plastic Strong Retention 2,26 KG	PL.800.CLEAR

All mentioned brand names in this catalogue are trademarks belonging to their respective companies.
The contents of this catalogue are subject to improvements or changes without any prior notice.

Purple Line.6

Prosthetic components compatible with
MIS SEVEN® implants

Overlock Extended Retention Kit with no Core.

* **Available either as a set or individually. They are used in cases where the total angulation axis among implants exceeds 15°.**

Description	Reference Number
Metal Housing	MH800
Black Lab Plastic	PL.800.BLACK
Red Plastic Light Retention 0,68 KG	PL.800.RED
Orange Plastic Medium Retention 1,36 KG	PL.800.ORANGE
Green Plastic Strong Retention 2,26 KG	PL.800.GREEN

Titanium Temporary Cylinders.

* **Chairside use or indirect in lab. With and without antirotation depending on the type of restoration (crown or bridge). Golden warm hue for better aesthetics.**

Ref. Number	Diameter ∅
06.330.900	3.3
06.330.901	3.3
06.375.900	3.75
06.375.901	3.75
06.450.900	4.5
06.450.901	4.5

Anti-Rotation

NO Anti-rotation

Screw Ref. Number: 06.330.100 / 06.100

Multi-Unit Abutments.

* **Multi-unit abutments is currently the most accepted and highly recommended solution in screw retained restorations. They have many advantages such as a common prosthetic platform for all implants.**

Ref. Number	Diameter ∅	Angulation Degrees(°)	Gingiva Height (mm)
MU.06.330.00.100	3.3	0 °	1.0
MU.06.330.00.200	3.3	0 °	2.0
MU.06.330.00.300	3.3	0 °	3.0
MU.06.330.00.400	3.3	0 °	4.0
MU.06.375.00.100	3.75	0 °	1.0
MU.06.375.00.200	3.75	0 °	2.0
MU.06.375.00.300	3.75	0 °	3.0
MU.06.375.00.400	3.75	0 °	4.0
MU.06.375.17.250	3.75	17 °	2.5
MU.06.375.17.350	3.75	17 °	3.5
MU.06.375.30.350	3.75	30 °	3.5
MU.06.375.30.450	3.75	30 °	4.5
MU.06.450.00.100	4.5	0 °	1.0
MU.06.450.00.200	4.5	0 °	2.0
MU.06.450.00.300	4.5	0 °	3.0
MU.06.450.00.400	4.5	0 °	4.0

Screw Ref. Number: MU06.100A

All mentioned brand names in this catalogue are trademarks belonging to their respective companies.
The contents of this catalogue are subject to improvements or changes without any prior notice.

Purple Line.6

Titanium grade 5

Prosthetic components compatible with
MIS SEVEN® implants

Multi-Unit Prosthetic System.

Description	Reference Number
Healing Screw	MU.402
Impression Post Open Tray	MU.500
Scan Abutment	MU.SA
Lab Analog	MU.200
Plastic Castable	MU.301
Ti-Base	MU.601
Titanium Temporary Cylinder	MU.901

Screw Ref. Number: MU.500.100
MU.100

* **Multi-Unit has its own prosthetic components, the same for all implant systems.**

All mentioned brand names in this catalogue are trademarks belonging to their respective companies.
The contents of this catalogue are subject to improvements or changes without any prior notice.

Titanium Grade 5

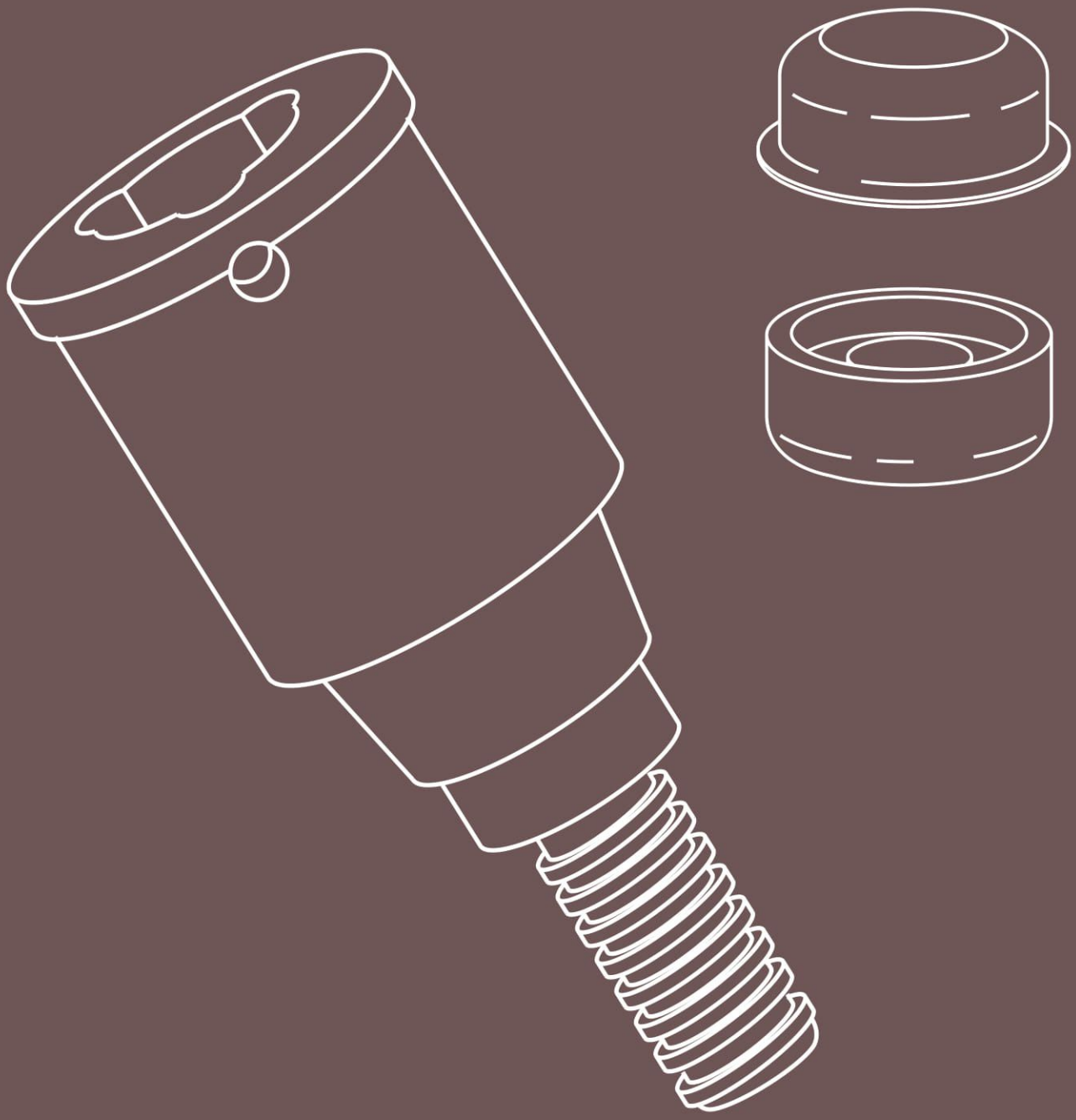

Brown Line.8

Prosthetic components compatible with
NOBEL ACTIVE® implants

Brown Line.8

Titanium grade 5

Prosthetic components compatible with
NOBEL ACTIVE® implants

Healing Screws.

Ref. Number	Diameter ∅	Height (mm)
08.350.403	3.5	3
08.350.405	3.5	5
08.430/500.403	4.3/5.0	3
08.430/500.405	4.3/5.0	5

Lab Analogs.

Ref. Number	Diameter ∅
08.350.200	3.5
08.430/500.200	4,3/5,0

* **Only one lab analog for both methods (impression or scanning)**

Impression Posts.

Ref. Number	Diameter ∅	Impression Method
08.350.500	3.5	Open Tray
08.350.550	3.5	Closed Tray
08.430/500.500	4.3/5.0	Open Tray
08.430/500.550	4.3/5.0	Closed Tray

⬢ **Screw Ref. Number:**
Open Tray: 08.350.500.100 / 08.430/500.500.100
Closed Tray 08.350.100 / 08.430/500.100

Scan Bodies.

Ref. Number	Diameter ∅
08.350.SA	3.5
08.430/500.SA	4.3/5.0

⬢ **Screw Ref. Number:** 08.350.100 / 08.430/500.100

* **Novamind scan bodies are used only in combination to novamind free libraries either with novamind ti-bases or directly on implant restorative platforms. Scan Bodies are made of peek and are easily scanned with intra-oral and desktop scanners.**

All mentioned brand names in this catalogue are trademarks belonging to their respective companies.
The contents of this catalogue are subject to improvements or changes without any prior notice.

Brown Line.8

Prosthetic components compatible with
NOBEL ACTIVE® implants

Ti-Bases.

Ref. Number	Diameter ∅	Gingiva Height (mm)
08.350.600.10	3.5	1
08.350.600.20	3.5	2
08.350.601.10	3.5	1
08.350.601.20	3.5	2
08.430/500.600.10	4,3/5,0	1
08.430/500.600.20	4,3/5,0	2
08.430/500.601.10	4,3/5,0	1
08.430/500.601.20	4,3/5,0	2

Anti-Rotation

NO Anti-rotation

* Novamind TI-BASES are colored with a warm Golden Hue for better aesthetic effect. They are available in two types, with and without antirotation depending on the type of restoration (crown or bridge)

Screw Ref. Number: 08.350.100 / 08.430/500.100

Titanium Abutments for Cemented Restorations.

		Angulation Degrees(°)	Gingiva Height (mm)
08.350.00.150	3.5	0 °	1,5
08.350.00.300	3.5	0 °	3
08.350.17.150	3.5	17 °	1,5
08.350.17.300	3.5	17 °	3
08.430/500.00.150	4,3/5,0	0 °	1,5
08.430/500.00.300	4,3/5,0	0 °	3
08.430/500.17.150	4,3/5,0	17 °	1,5
08.430/500.17.300	4,3/5,0	17 °	3

Screw Ref. Number: 08.350.100 / 08.430/500.100

* Available in different degrees of angulation 0°, 17°, and in some cases 23°. Two different gingiva height collars to optimize the best possible emergence profile.

Castable Abutments.

Ref. Number	Diameter ∅
08.350.710	3,5
08.350.711	3,5
08.430/500.710	4,3/5,0
08.430/500.711	4,3/5,0

Anti-Rotation

NO Anti-rotation

Screw Ref. Number: 08.350.100 / 08.430/500.100

* Two types of castable abutments are available. One is fully plastic and one is with pre-fabricated Co-Cr implant connection for cast-on.

All mentioned brand names in this catalogue are trademarks belonging to their respective companies.
The contents of this catalogue are subject to improvements or changes without any prior notice.

Brown Line.8

Titanium grade 5

Prosthetic components compatible with
NOBEL ACTIVE® implants

Overdenture Over-Lock Abutments.

Ref. Number	Diameter ∅	Height (mm)
08.350.801	3,5	1
08.350.802	3,5	2
08.350.803	3,5	3
08.350.804	3,5	4
08.430/500.801	4,3/5,0	1
08.430/500.802	4,3/5,0	2
08.430/500.803	4,3/5,0	3
08.430/500.804	4,3/5,0	4

* **Over-Locks are compatible to locator abutments for overdentures. 4 different Heights.**

Overlock Standard Retention Kit.

Description	Reference Number
Metal Housing	MH800
Black Lab Plastic	PL.800.BLACK
Blue Plastic Light Retention 0,68 KG	PL.800.BLUE
Grey Plastic Medium Retention 1,36 KG	PL.800.GREY
Clear Plastic Strong Retention 2,26 KG	PL.800.CLEAR

* **Available either as a set or individually. They are used in cases where the total angulation axis among implants does not exceed 15°.**

Overlock Extended Retention Kit with no Core.

Description	Reference Number
Metal Housing	MH800
Black Lab Plastic	PL.800.BLACK
Red Plastic Light Retention 0,68 KG	PL.800.RED
Orange Plastic Medium Retention 1,36 KG	PL.800.ORANGE
Green Plastic Strong Retention 2,26 KG	PL.800.GREEN

* **Available either as a set or individually. They are used in cases where the total angulation axis among implants exceeds 15°.**

Titanium Temporary Cylinders.

Ref. Number	Diameter ∅
08.350.900	3,5
08.350.901	3,5
08.430/500.900	4,3/5,0
08.430/500.901	4,3/5,0

Anti-Rotation

NO Anti-rotation

Screw Ref. Number: 08.350.100 / 08.430/500.100

* **Chairside use or indirect in lab. With and without antirotation depending on the type of restoration (crown or bridge). Golden warm hue for better aesthetics.**

All mentioned brand names in this catalogue are trademarks belonging to their respective companies.
The contents of this catalogue are subject to improvements or changes without any prior notice.

Brown Line.8

Prosthetic components compatible with
NOBEL ACTIVE® implants

Multi-Unit Abutments.

Ref. Number	Diameter ∅	Angulation Degrees(°)	Gingiva Height (mm)
MU.08.350.00.100	3,5	0 °	1.0
MU.08.350.00.200	3,5	0 °	2.0
MU.08.350.00.300	3,5	0 °	3.0
MU.08.350.00.400	3,5	0 °	4.0
MU.08.350.17.250	3,5	17 °	2,5
MU.08.350.17.350	3,5	17 °	3,5
MU.08.350.30.350	3,5	30 °	3,5
MU.08.350.30.450	3,5	30 °	4,5
MU.08.430/500.00.100	4,3/5,0	0 °	1
MU.08.430/500.00.200	4,3/5,0	0 °	2
MU.08.430/500.00.300	4,3/5,0	0 °	3
MU.08.430/500.00.400	4,3/5,0	0 °	4
MU.08.430/500.17.250	4,3/5,0	17 °	2,5
MU.08.430/500.17.350	4,3/5,0	17 °	3,5
MU.08.430/500.30.350	4,3/5,0	30 °	3,5
MU.08.430/500.30.450	4,3/5,0	30 °	4,5

* **Multi-unit abutments is currently the most accepted and highly recommended solution in screw retained restorations. They have many advantages such as a common prosthetic platform for all implants.**

Multi-Unit Prosthetic System.

Description	Reference Number
Healing Screw	MU.402
Impression Post Open Tray	MU.500
Scan Abutment	MU.SA
Lab Analog	MU.200
Plastic Castable	MU.301
Ti-Base	MU.601
Titanium Temporary Cylinder	MU.901

⬢ **Screw Ref. Number:** MU.500.100
MU.100

* **Multi-Unit has its own prosthetic components, the same for all implant systems.**

All mentioned brand names in this catalogue are trademarks belonging to their respective companies.
The contents of this catalogue are subject to improvements or changes without any prior notice.

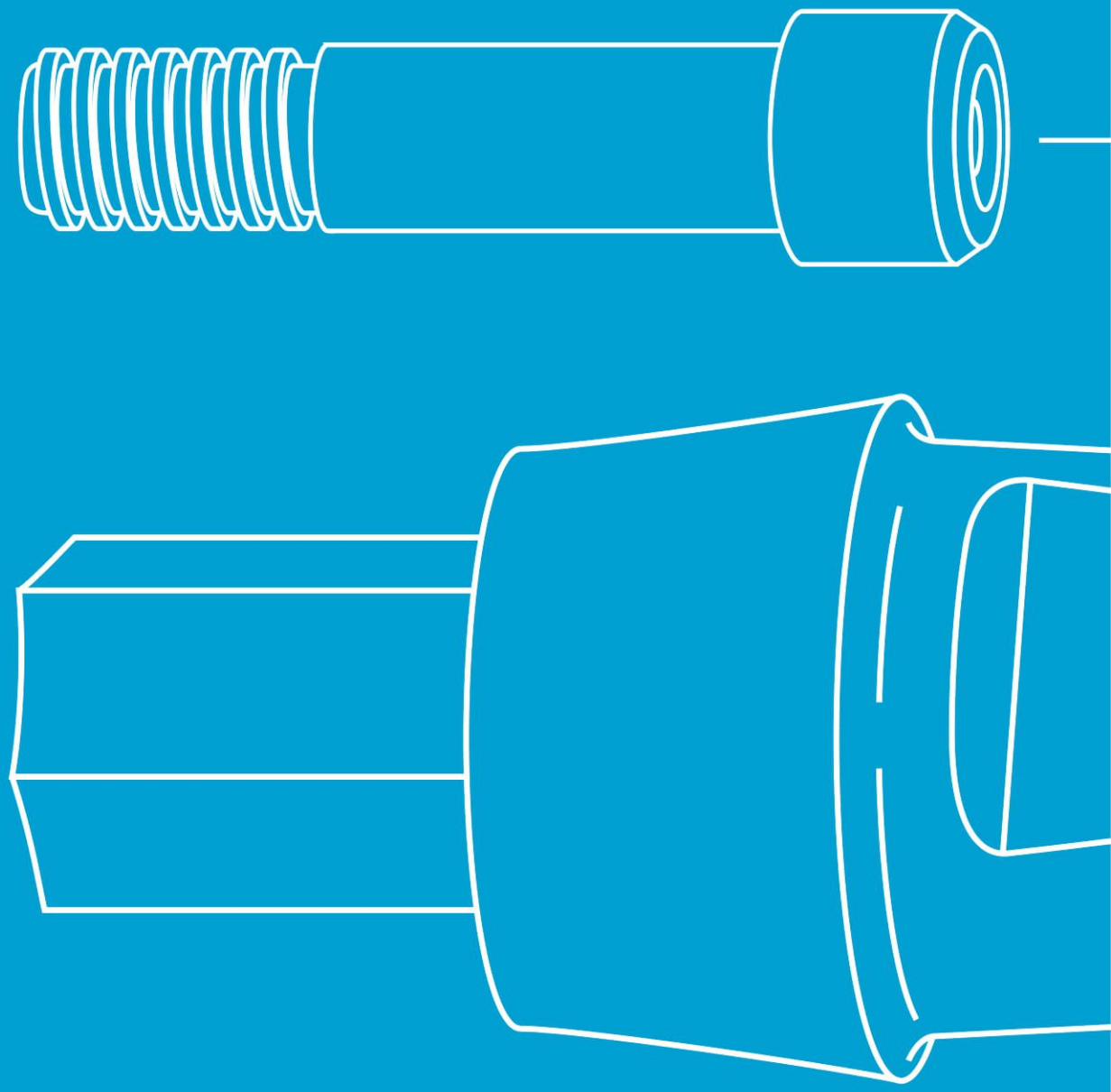

Cyan Line.10

Prosthetic components compatible with
Bredent Blue Sky® implants

Titanium Grade 5

10.100

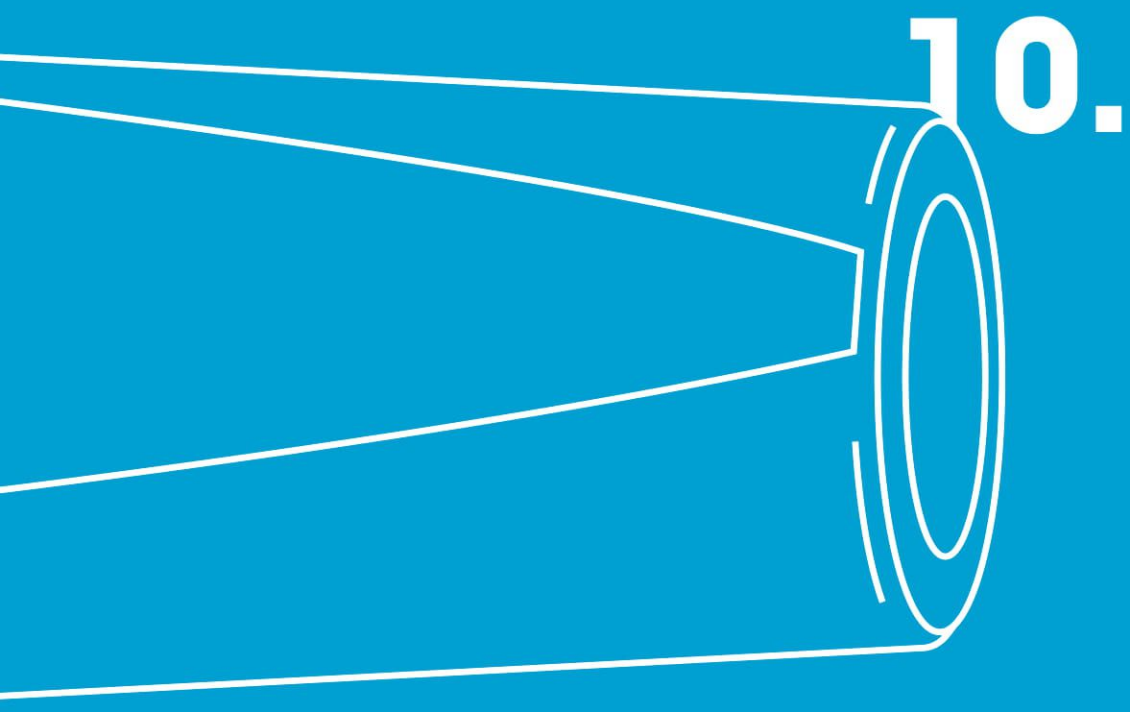

Cyan Line.10

Titanium grade 5

Prosthetic components compatible with
Bredent Blue Sky® implants

Healing Screws.

Ref. Number	Diameter ∅	Height (mm)
10.400.403	4	3
10.400.405	4	5

Lab Analogs.

Ref. Number	Diameter ∅
10.400.200	4

✱ **Only one lab analog for both methods (impression or scanning)**

Impression Posts.

Ref. Number	Diameter ∅	Impression Method
10.400.500	4	Open Tray
10.400.550	4	Closed Tray

⬢ **Screw Ref. Number:** Open Tray: 10.500.100
Closed Tray: 10.100

Scan Bodies.

Ref. Number	Diameter ∅
10.400.SA	4

✱ **Novamind scan bodies are used only in combination to novamind free libraries either with novamind ti-bases or directly on implant restorative platforms. Scan Bodies are made of peek and are easily scanned with intra-oral and desktrop scanners.**

⬢ **Screw Ref. Number:** 10.100

All mentioned brand names in this catalogue are trademarks belonging to their respective companies.
The contents of this catalogue are subject to improvements or changes without any prior notice.

Cyan Line.10

Prosthetic components compatible with
Bredent Blue Sky® implants

Ti-Bases.

Ref. Number	Diameter ∅	Gingiva Height (mm)
10.400.600.05	4	0,5
10.400.600.15	4	1,5
10.400.601.05	4	0,5
10.400.601.15	4	1,5

Screw Ref. Number: 10.100

Anti-Rotation

NO Anti-rotation

Novamind TI-BASES are colored with a warm Golden Hue for better aesthetic effect. They are available in two types, with and without antirotation depending on the type of restoration (crown or bridge)

Titanium Abutments for cemented restorations.

Ref. Number	Diameter ∅	Angulation Degrees(°)	Gingiva Height (mm)
10.400.00.150	4	0 °	1,5
10.400.00.250	4	0 °	2,5
10.400.00.350	4	0 °	3,5
10.400.17.150	4	17 °	1,5
10.400.17.250	4	17 °	2,5
10.400.17.350	4	17 °	3,5

Screw Ref. Number: 10.100

Available in different degrees of angulation 0°, 17°, and in some cases 23°. Three different gingiva height collars to optimize the best possible emergence profile.

Castable Abutments.

Ref. Number	Diameter ∅
10.400.300	4
10.400.301	4
10.400.710	4
10.400.711	4

Anti-Rotation

NO Anti-rotation

Screw Ref. Number: 10.100

Two types of castable abutments are available. One is fully plastic and one is with pre-fabricated Co-Cr implant connection for cast-on.

All mentioned brand names in this catalogue are trademarks belonging to their respective companies.
The contents of this catalogue are subject to improvements or changes without any prior notice.

Cyan Line.10

Titanium grade 5

Prosthetic components compatible with
Bredent Blue Sky® implants

Overdenture Over-Lock Abutments.

Ref. Number	Diameter ∅	Height (mm)
10.400.801	4	1
10.400.802	4	2
10.400.803	4	3
10.400.804	4	4

* **Over-Locks are compatible to locator abutments for overdentures. 4 different Heights.**

Overlock Standard Retention Kit.

Description	Reference Number
Metal Housing	MH800
Black Lab Plastic	PL.800.BLACK
Blue Plastic Light Retention 0,68 KG	PL.800.BLUE
Grey Plastic Medium Retention 1,36 KG	PL.800.GREY
Clear Plastic Strong Retention 2,26 KG	PL.800.CLEAR

* **Available either as a set or individually. They are used in cases where the total angulation axis among implants does not exceed 15°.**

Overlock Extended Retention Kit with no Core.

Description	Reference Number
Metal Housing	MH800
Black Lab Plastic	PL.800.BLACK
Red Plastic Light Retention 0,68 KG	PL.800.RED
Orange Plastic Medium Retention 1,36 KG	PL.800.ORANGE
Green Plastic Strong Retention 2,26 KG	PL.800.GREEN

* **Available either as a set or individually. They are used in cases where the total angulation axis among implants exceeds 15°.**

All mentioned brand names in this catalogue are trademarks belonging to their respective companies.
The contents of this catalogue are subject to improvements or changes without any prior notice.

Cyan Line.10

Prosthetic components compatible with
Bredent Blue Sky® implants

Multi-Unit Abutments.

Ref. Number	Diameter ∅	Angulation Degrees(°)	Gingiva Height (mm)
MU.10.400.00.100	4	0 °	1.0
MU.10.400.00.200	4	0 °	2.0
MU.10.400.00.300	4	0 °	3.0
MU.10.400.00.400	4	0 °	4.0

* **Multi-unit abutments is currently the most accepted and highly recommended solution in screw retained restorations. They have many advantages such as a common prosthetic platform for all implants.**

Multi-Unit Prosthetic System.

Description	Reference Number
Healing Screw	MU.402
Impression Post Open Tray	MU.500
Scan Abutment	MU.SA
Lab Analog	MU.200
Plastic Castable	MU.301
Ti-Base	MU.601
Titanium Temporary Cylinder	MU.901

Screw Ref. Number: MU.500.100
MU.100

* **Multi-Unit has its own prosthetic components, the same for all implant systems.**

All mentioned brand names in this catalogue are trademarks belonging to their respective companies.
The contents of this catalogue are subject to improvements or changes without any prior notice.

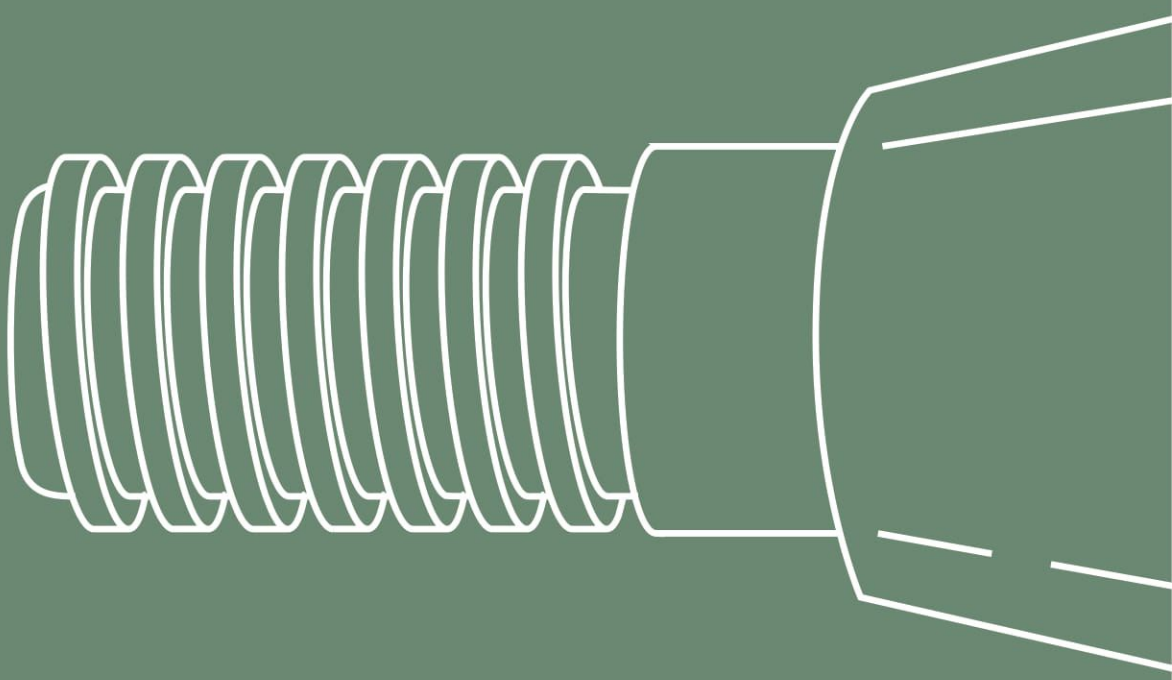

Olive Line.11

Prosthetic components compatible with
Implantium-Dentium® implants

Titanium Grade 5

11.

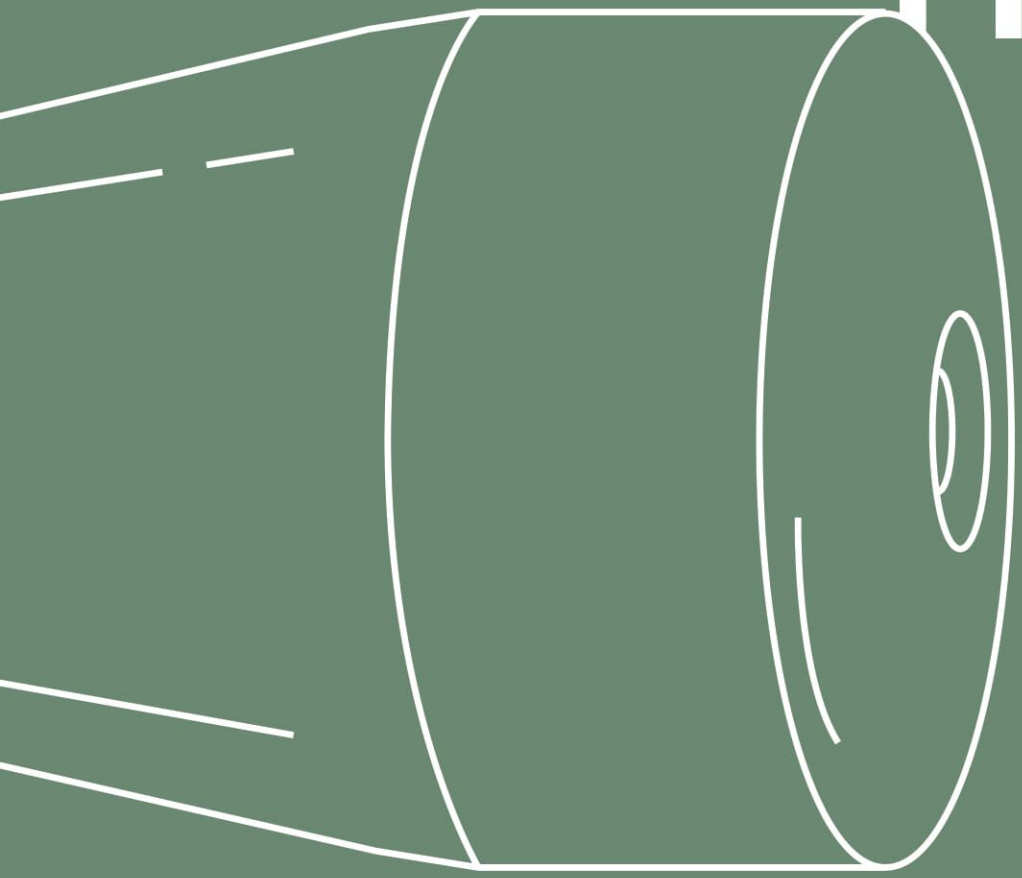

Olive Line.11

Titanium grade 5

Prosthetic components compatible with
Implantium-Dentium® implants

Healing Screws.

Ref. Number	Diameter ∅	Height (mm)
11.450.401	4,5	1
11.450.402	4,5	2
11.450.403	4,5	3
11.450.405	4,5	5

Lab Analogs.

Ref. Number	Diameter ∅
11.450.200	4,5

✱ **Only one lab analog for both methods (impression or scanning)**

Impression Posts.

Ref. Number	Diameter ∅	Impression Method
11.450.500	4,5	Open Tray
11.450.550	4,5	Closed Tray

⬣ **Screw Ref. Number:** Open Tray: 11.500.100
Closed Tray: 11.100

Scan Bodies.

Ref. Number	Diameter ∅
11.450.SA	4,5

⬣ **Screw Ref. Number:** 11.100

✱ **Novamind scan bodies are used only in combination to novamind free libraries either with novamind ti-bases or directly on implant restorative platforms. Scan Bodies are made of peek and are easily scanned with intra-oral and desktrop scanners.**

All mentioned brand names in this catalogue are trademarks belonging to their respective companies.
The contents of this catalogue are subject to improvements or changes without any prior notice.

Olive Line.11

Prosthetic components compatible with
Implantium-Dentium® implants

Ti-Bases.

Ref. Number	Diameter ∅	Gingiva Height (mm)
11.450.600.10	4,5	1,0
11.450.600.20	4,5	2,0
11.450.601.10	4,5	1,0
11.450.601.20	4,5	2,0

Anti-Rotation

NO Anti-rotation

Screw Ref. Number: 11.100

* **Novamind TI-BASES are colored with a warm Golden Hue for better aesthetic effect. They are available in two types, with and without antirotation depending on the type of restoration (crown or bridge)**

Titanium Abutments for cemented restorations.

Ref. Number	Diameter ∅	Angulation Degrees(°)	Gingiva Height (mm)
11.450.00.150	4,5	0 °	1,5
11.450.00.250	4,5	0 °	2,5
11.450.00.350	4,5	0 °	3,5
11.450.17.150	4,5	17 °	1,5
11.450.17.250	4,5	17 °	2,5
11.450.17.350	4,5	17 °	3,5
11.450.25.150	4,5	25 °	1,5
11.450.25.250	4,5	25 °	2,5
11.450.25.350	4,5	25 °	3,5

Screw Ref. Number: 11.100

* **Available in three different degrees of angulation 0,17,25. Three different gingiva height collars to optimize the best possible emergence profile.**

Castable Abutments.

Ref. Number	Diameter ∅
11.450.710	4,5
11.450.711	4,5

Anti-Rotation

NO Anti-rotation

Screw Ref. Number: 11.100

* **Two types of castable abutments are available. One is fully plastic and one is with pre-fabricated Co-Cr implant connection for cast-on.**

All mentioned brand names in this catalogue are trademarks belonging to their respective companies.
The contents of this catalogue are subject to improvements or changes without any prior notice.

Olive Line.11

Titanium grade 5

Prosthetic components compatible with
Implantium-Dentium® implants

Overdenture Over-Lock Abutments.

Ref. Number	Diameter ∅	Height (mm)
11.450.801	4,5	1
11.450.802	4,5	2
11.450.803	4,5	3
11.450.804	4,5	4

* **Over-Locks are compatible to locator abutments for overdentures. 4 different Heights.**

Overlock Standard Retention Kit.

Description	Reference Number
Metal Housing	MH800
Black Lab Plastic	PL.800.BLACK
Blue Plastic Light Retention 0,68 KG	PL.800.BLUE
Grey Plastic Medium Retention 1,36 KG	PL.800.GREY
Clear Plastic Strong Retention 2,26 KG	PL.800.CLEAR

* **Available either as a set or individually. They are used in cases where the total angulation axis among implants does not exceed 15°.**

Overlock Extended Retention Kit with no Core.

Description	Reference Number
Metal Housing	MH800
Black Lab Plastic	PL.800.BLACK
Red Plastic Light Retention 0,68 KG	PL.800.RED
Orange Plastic Medium Retention 1,36 KG	PL.800.ORANGE
Green Plastic Strong Retention 2,26 KG	PL.800.GREEN

* **Available either as a set or individually. They are used in cases where the total angulation axis among implants exceeds 15°.**

All mentioned brand names in this catalogue are trademarks belonging to their respective companies.
The contents of this catalogue are subject to improvements or changes without any prior notice.

Olive Line.11

Prosthetic components compatible with
Implantium-Dentium® implants

Multi-Unit Abutments.

Ref. Number	Diameter ∅	Angulation Degrees(°)	Gingiva Height (mm)
MU.11.450.00.100	4,5	0 °	1,0
MU.11.450.00.200	4,5	0 °	2,0
MU.11.450.00.300	4,5	0 °	3,0
MU.11.450.00.400	4,5	0 °	4,0
MU.11.450.17.250	4,5	17 °	2,5

* **Multi-unit abutments is currently the most accepted and highly recommended solution in screw retained restorations. They have many advantages such as a common prosthetic platform for all implants.**

Multi-Unit Prosthetic System.

Description	Reference Number
Healing Screw	MU.402
Impression Post Open Tray	MU.500
Scan Abutment	MU.SA
Lab Analog	MU.200
Plastic Castable	MU.301
Ti-Base	MU.601
Titanium Temporary Cylinder	MU.901

Screw Ref. Number: MU.500.100
MU.100

* **Multi-Unit has its own prosthetic components, the same for all implant systems.**

All mentioned brand names in this catalogue are trademarks belonging to their respective companies.
The contents of this catalogue are subject to improvements or changes without any prior notice.

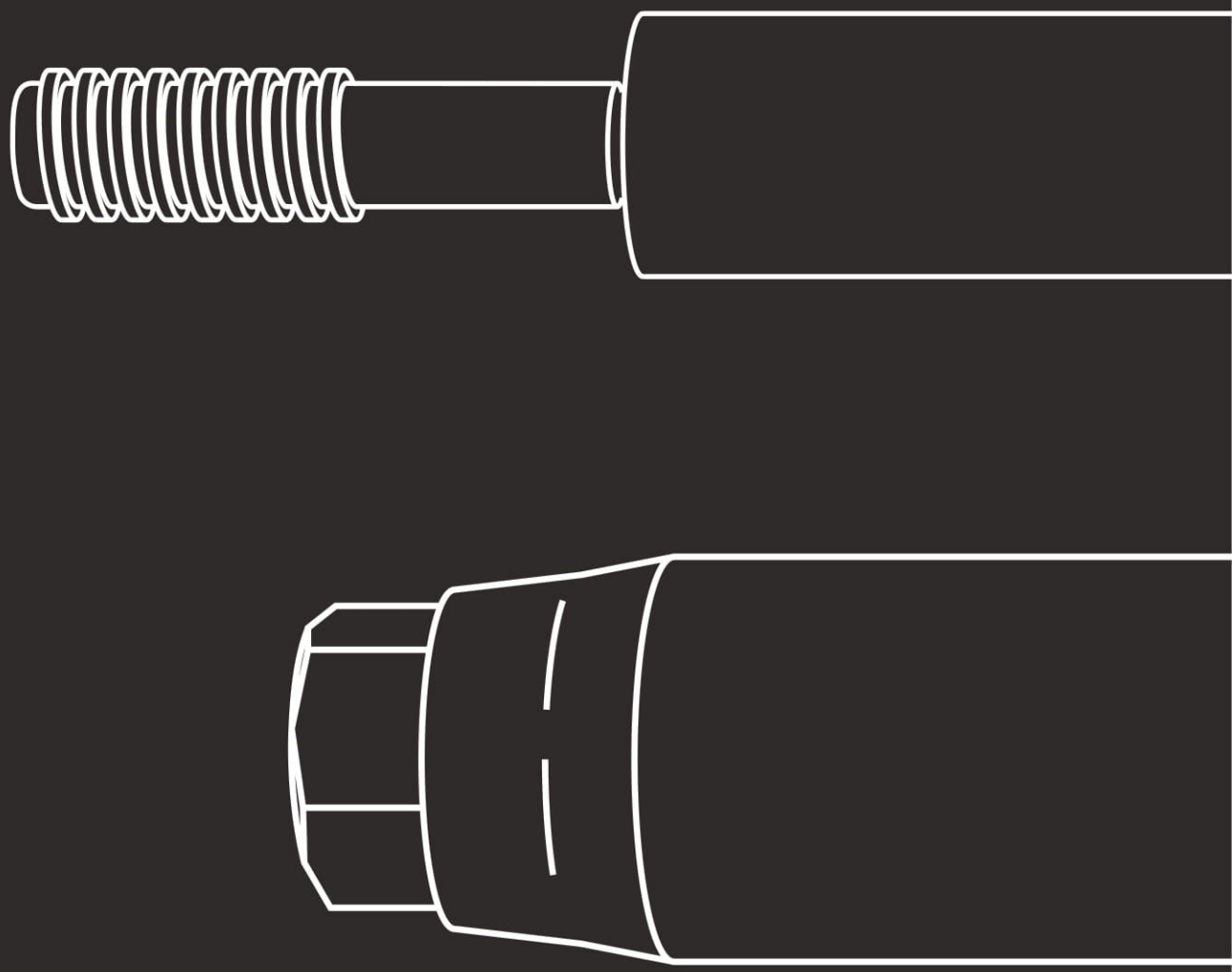

Black Line.12

Prosthetic components compatible with
Megagen anyridge series® implants

Titanium Grade 5

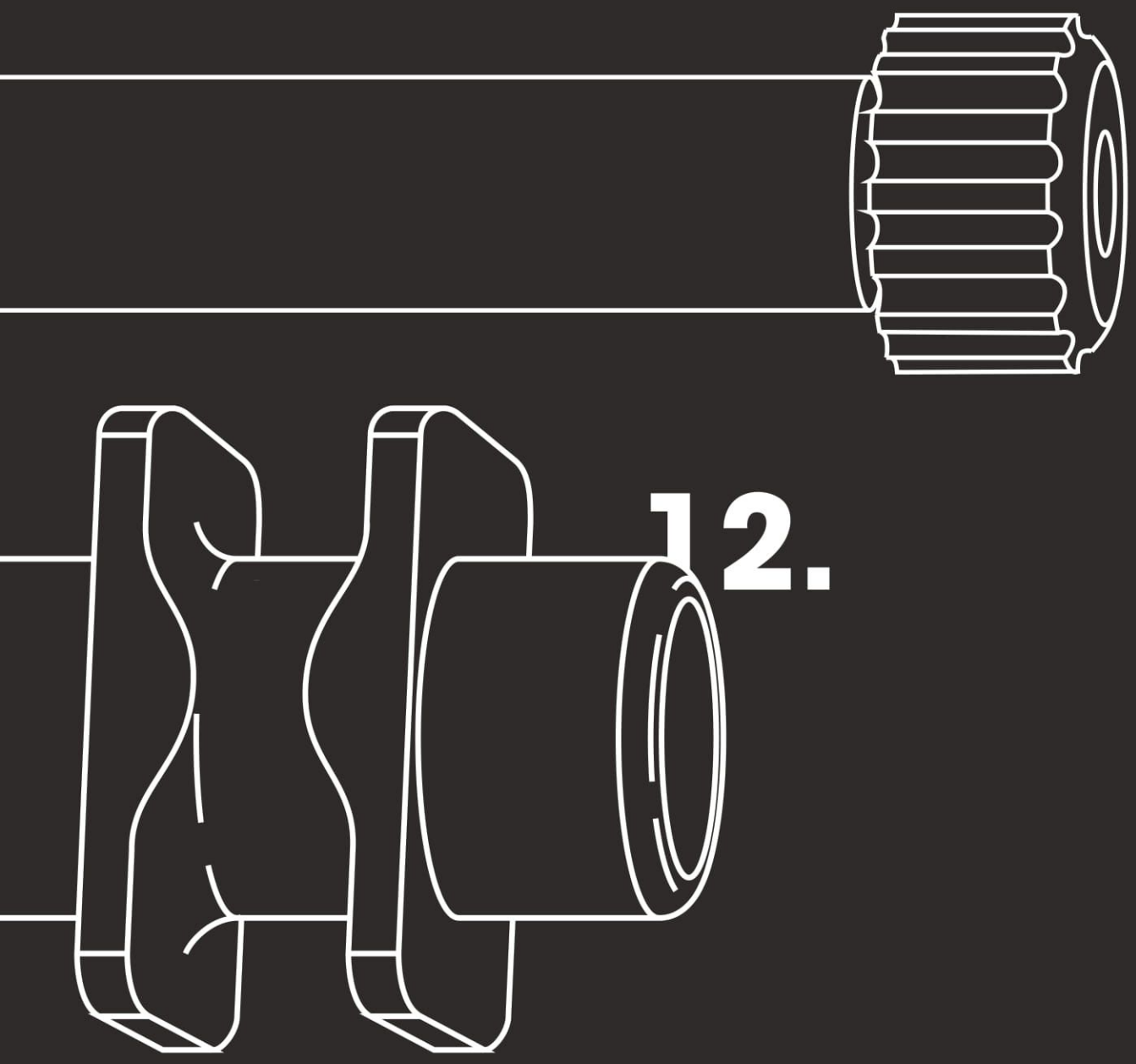

12.

Black Line.12

Titanium grade 5

Prosthetic components compatible with
Megagen anyridge series® implants

Healing Screws.

Ref. Number	Diameter ∅	Height (mm)
12.500.403	5	3
12.500.405	5	5

Lab Analogs.

Ref. Number	Diameter ∅
12.500.200	5

* **Only one lab analog for both methods (impression or scanning)**

Impression Posts.

Ref. Number	Diameter ∅	Impression Method
12.500.500	5	Open Tray
12.500.550	5	Closed Tray

⬢ **Screw Ref. Number:** Open Tray: 12.500.100
Cloed Tray: 12.100

Scan Bodies.

Ref. Number	Diameter ∅
12.500.SA	5

⬢ **Screw Ref. Number:** 12.100

* **Novamind scan bodies are used only in combination to novamind free libraries either with novamind ti-bases or directly on implant restorative platforms. Scan Bodies are made of peek and are easily scanned with intra-oral and desktrop scanners.**

All mentioned brand names in this catalogue are trademarks belonging to their respective companies.
The contents of this catalogue are subject to improvements or changes without any prior notice.

Black Line.12

Prosthetic components compatible with
Megagen anyridge series® implants

Ti-Bases.

Ref. Number	Diameter ∅	Gingiva Height (mm)
12.500.600.10	5	1,0
12.500.600.20	5	2,0
12.500.601.10	5	1,0
12.500.601.20	5	2,0

Anti-Rotation

NO Anti-rotation

Screw Ref. Number: 12.100

Novamind TI-BASES are colored with a warm Golden Hue for better aesthetic effect. They are available in two types, with and without antirotation depending on the type of restoration (crown or bridge)

Titanium Abutments for cemented restorations.

Ref. Number	Diameter ∅	Angulation Degrees(°)	Gingiva Height (mm)
12.500.00.200	5	0 °	2
12.500.17.200	5	17 °	2

Screw Ref. Number: 12.100

Available in different degrees of angulation 0°, 17°, and in some cases 23°. Three different gingiva height collars to optimize the best possible emergence profile.

Castable Abutments.

Ref. Number	Diameter ∅
12.500.300	5
12.500.301	5
12.500.710	5
12.500.711	5

Anti-Rotation

NO Anti-rotation

Screw Ref. Number: 12.100

Two types of castable abutments are available. One is fully plastic and one is with pre-fabricated Co-Cr implant connection for cast-on.

All mentioned brand names in this catalogue are trademarks belonging to their respective companies.
The contents of this catalogue are subject to improvements or changes without any prior notice.

Black Line.12

Titanium grade 5

Prosthetic components compatible with
Megagen anyridge series® implants

Overdenture Over-Lock Abutments.

Ref. Number	Diameter ∅	Height (mm)
12.500.801	5	1
12.500.802	5	2
12.500.803	5	3
12.500.804	5	4

* **Over-Locks are compatible to locator abutments for overdentures. 4 different Heights.**

Overlock Standard Retention Kit.

Description	Reference Number
Metal Housing	MH800
Black Lab Plastic	PL.800.BLACK
Blue Plastic Light Retention 0,68 KG	PL.800.BLUE
Grey Plastic Medium Retention 1,36 KG	PL.800.GREY
Clear Plastic Strong Retention 2,26 KG	PL.800.CLEAR

* **Available either as a set or individually. They are used in cases where the total angulation axis among implants does not exceed 15°.**

Overlock Extended Retention Kit with no Core.

Description	Reference Number
Metal Housing	MH800
Black Lab Plastic	PL.800.BLACK
Red Plastic Light Retention 0,68 KG	PL.800.RED
Orange Plastic Medium Retention 1,36 KG	PL.800.ORANGE
Green Plastic Strong Retention 2,26 KG	PL.800.GREEN

* **Available either as a set or individually. They are used in cases where the total angulation axis among implants exceeds 15°.**

All mentioned brand names in this catalogue are trademarks belonging to their respective companies.
The contents of this catalogue are subject to improvements or changes without any prior notice.

Black Line.12

Prosthetic components compatible with
Megagen anyridge series® implants

Multi-Unit Abutments.

Ref. Number	Diameter ∅	Angulation Degrees(°)	Gingiva Height (mm)
MU.12.500.00.150	5	0 °	1,5
MU.12.500.00.250	5	0 °	2,5
MU.12.500.00.350	5	0 °	3,5
MU.12.500.00.450	5	0 °	4,5

* **Multi-unit abutments is currently the most accepted and highly recommended solution in screw retained restorations. They have many advantages such as a common prosthetic platform for all implants.**

Multi-Unit Prosthetic System.

Description	Reference Number
Healing Screw	MU.402
Impression Post Open Tray	MU.500
Scan Abutment	MU.SA
Lab Analog	MU.200
Plastic Castable	MU.301
Ti-Base	MU.601
Titanium Temporary Cylinder	MU.901

Screw Ref. Number: MU.500.100
MU.100

* **Multi-Unit has its own prosthetic components, the same for all implant systems.**

All mentioned brand names in this catalogue are trademarks belonging to their respective companies.
The contents of this catalogue are subject to improvements or changes without any prior notice.

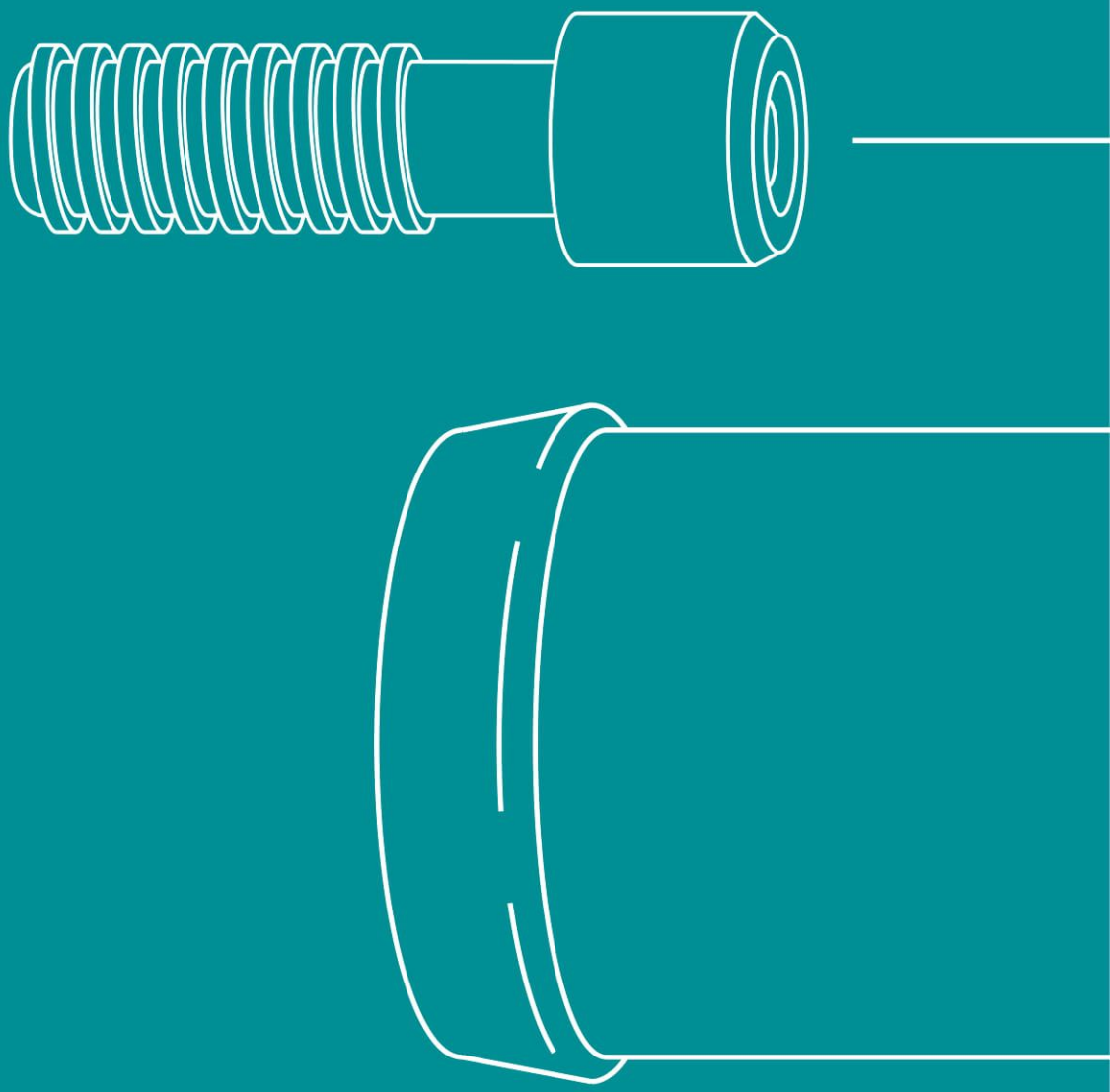

Petrol Line.33

Prosthetic components compatible with
3i External Hex® implants

Titanium Grade 5

33.100

33.

Petrol Line.33

Titanium grade 5

Prosthetic components compatible with
Brannemark/3i External Hex Standard Platform

Lab Analogs.

Ref. Number	Diameter ∅
33.410.200	4,1

* **Only one lab analog for both methods (impression or scanning)**

Impression Posts.

Ref. Number	Diameter ∅	Impression Method
33.410.500	4,1	Open Tray

⬢ **Screw Ref. Number:** Open Tray: 33.500.100

Scan Bodies.

Ref. Number	Diameter ∅
33.410.SA	4,1

⬢ **Screw Ref. Number:** 33.100

* **Novamind scan bodies are used only in combination to novamind free libraries either with novamind ti-bases or directly on implant restorative platforms. Scan Bodies are made of peek and are easily scanned with intra-oral and desktrop scanners.**

All mentioned brand names in this catalogue are trademarks belonging to their respective companies.
The contents of this catalogue are subject to improvements or changes without any prior notice.

Petrol Line.33

Prosthetic components compatible with
Brannemark/3i External Hex Standard Platform

Ti-Bases.

Ref. Number	Diameter ∅	Gingiva Height (mm)
33.410.600.10	4,1	1,0
33.410.600.20	4,1	2,0
33.410.601.10	4,1	1,0
33.410.601.20	4,1	2,0

Anti-Rotation

NO Anti-rotation

Screw Ref. Number: 33.100

* **Novamind TI-BASES are colored with a warm Golden Hue for better aesthetic effect. They are available in two types, with and without antirotation depending on the type of restoration (crown or bridge)**

Castable Abutments.

Ref. Number	Diameter ∅
33.410.300	4,1
33.410.301	4,1
33.410.710	4,1
33.410.711	4,1

Anti-Rotation

NO Anti-rotation

Screw Ref. Number: 33.100

* **Pre-fabricated Co-Cr implant connection for cast-on.**

Titanium Temporary Cylinders

Ref. Number	Diameter ∅
33.410.900	4,1
33.410.901	4,1

Anti-Rotation

NO Anti-rotation

Screw Ref. Number: 33.100

* **Chairside use or indirect in lab. With and withour antirotation depending on the type of restoration (crown or bridge). Golden warm hue for better aesthetics.**

All mentioned brand names in this catalogue are trademarks belonging to their respective companies.
The contents of this catalogue are subject to improvements or changes without any prior notice.